FOOD MANUFACTURE

Vol. XX, No. 12 December 1, 1945

Science and the Press

THE matchmakers trying to arrange the marriage between science and press publicity are far from unanimous as to the methods best to be employed.

On the medical side the suggestion is for that profession to "develop news sense and to co-operate with the well-educated men that Fleet Street can provide." In short—to learn journalism.

The establishment of a Guild of Science Writers, whose members would hold some scientific qualification, is recommended by Mr. William E. Dick, editor of *Discovery*, and we are informed that this has gained considerable approval.

At a recent meeting of the members of the London and south-eastern counties section of the Royal Institute of Chemistry, Dr. O. J. R. Howarth, secretary of the British Association for the Advancement of Science, said that there is increasing public interest in science, but neither science nor the press is as yet making adequate provision for this. Few journalists knew about science and few scientists could write for the layman. Unlike the other opinions quoted above, Dr. Howarth took the view that the initiative should come from the press.

Exhibitions provide the most satisfying form of publicity media, was the opinion of Mr. O. F. Brown.

The film as a medium for spreading news of science was outlined by Mr. George A. Jones of the Scientific Film Association. Scientists may note with a wry smile his remark that "films could even be of value to scientists themselves, bringing home to them the wider part which they played in affairs." His proposal for regular informal meetings of scientists and publicists is one which promises to be realised.

Stating that the B.B.C. accepted the responsibility of presenting science to the citizen, Mr. Vincent Alford, acting assistant director of talks, claimed the ability of broadcasting to share in the interpretation of the expert to the less expert. Apart from reporting news of general scientific progress, this was done by features and by talks.

It would be premature to attempt any more than a summary of the different angles of view expressed by the experts quoted above. There is marked disagreement whence the initiative should come—whether from the press or the scientist. If from the latter, the desired combination of aptitudes might be realised by a special syllabus in scientific training and the creation of a new degree and therefrom a new profession of scientific journalists. As things are at present the scientist cannot be blamed for his lack of journalistic technique. The records of his work must inevitably consist of stark facts, tables of figures, etc., inherently unsuitable for the layman, and the technique of writing for him (perhaps it would not be inappropriate to ask what this technique is) must be acquired. Doubtless the meetings between the scientists and the publicists will enable this point to be thrashed out.

The attraction of attention, the holding of interest, and the leaving of a lasting impression, attributes of exhibitions in favour of which Mr. Brown spoke, must be qualified by the comparatively limited number of people attracted by them.

There can be no widely diverse opinion as to the value of films as a publicity medium. The reference to the conference on scientific films published in this issue will give some idea of the activities connected with the use of the instructional film.

We come finally to the role played by broadcasting in disseminating scientific knowledge to the million. After considerable enquiry we failed to find one layman who listened to the recent talk on "White Bread or Brown" between the Radio Doctor and Dr. Kent-Jones. The B.B.C. is making a valiant attempt in such programmes as "Your Questions Answered," but until the ground has been better prepared, a good deal of the seed sown will not fructify.

The whole problem is a long-term one involving

more teaching of science in the early stages of education, together with the increased use of the means discussed at the Institute's meeting, by scientists trained *ad hoc*.

Instrumentation of British Industry

The speech made by Sir Frank Smith, President of the Institute of Physics, in opening a joint conference of that Institute, the Institute of Chemical Engineers, and the Chemical Engineering Group of the Society of Chemical Industry, stressed the use of instruments in different branches of scientific and technical activities. The importance of such instruments is not sufficiently appreciated either by industry or the Government. Without the use of instruments in the first place such results of research as radar and the atomic bomb could never have been achieved.

Nearly every big advance in industry is the result of knowledge obtained by the use of a new instrument; the history of the steam engine shows that it was the direct result of a study of the barometer.

The main objective of the conference (said Sir Frank) was to urge upon the big industrialists of this country the need for increased instrumentation of their industries.

The Government is urging that we should be more scientifically-minded, and it has stated with no lack of emphasis that we must increase our export trade. Speaking of the people of the United States in this connexion, Sir Frank said that they believe that their industries are more efficient than ours. There is little doubt that they accept changes more readily than we do. There is enthusiasm for things which are new, and there is a readiness to accept standardisation for a period when mass-production of a new article commences. We can learn much from the United States in instrumentation.

There is a host of articles not hitherto mass-produced in this country to which this method would readily apply. To do this cheaply, and at the same time make the articles attractive, big industrial units and the control of manufacturing operations by instrumentation are necessary.

Fish Industry Criticised

Criticism of the Scottish fishing industry is contained in a report just issued by the Scottish Council on Industry, which established a White Fish Committee to investigate the position in this important food industry. The White Fish Committee was established by Mr. Thomas Johnston, when Secretary of State for Scotland, to investigate the position resulting from a decline of Scottish white fish landings at a time when English landings had increased by 50 per cent.

The committe has now issued its report and places the chief blame for Scottish decline on the policy of fishing near and middle waters while the Hull owners built powerful modern vessels which fished far waters. The committee sees no point in the Scottish industry building any great number of new vessels for near or middle waters, which are already overfished, but urge that a certain number of powerful vessels be built to fish the far waters. (This is actually now being done, several large modern Diesels being under construction at Aberdeen). It is suggested that a Government subsidy might be required, but owners in Aberdeen have indicated that they can find the finance for this purpose, although loans would be acceptable.

The investigation disclosed that 80 per cent. of Aberdeen trawlers and 82 per cent. of Granton trawlers were over 20 years of age and were either ageing or obsolescent. It is urged that the White Fish Commission should be revived with powers to license boats, to space landings and sailings, and to amalgamate or otherwise reduce the large number of operating units. The creation of a ratio of foreign landings is also urged, as there is, the committee believes, a strong case for such a policy. That ratio should be on a monthly basis to prevent the foreigners from piling up a total over some months and then killing the market by dumping.

The need to pay greater attention to freezing and cold storage is emphasised.

A Multi-Purpose Meal

As a proposed means of contributing to the feeding of Europe, Dr. Henry Borsook, Professor of Biochemistry, the Institute of Technology, Pasadena, has worked out what he calls a multi-purpose meal. The list of his objectives is too long to reproduce here, but palatability, good appearance, conformity with dietary laws of all nations, ease of cooking, good keeping properties, and low cost are among them. It is intended to be a one-dish meal, satisfying for four to six hours.

The characteristics of the meal were determined by the necessity of providing protein of high biological quality at as low a cost as possible. To provide this soya grits were chosen instead of soya beans, because of their higher protein value, their superior flavour, and quicker cooking. In addition to soya grits, the meal contains dehydrated potato, cabbage, tomato, onions, leeks, parsley, and herbs.

Calcium is provided by calcium chloride and vitamins A and D (from fish liver oils), and vitamin B_1, riboflavin, and niacin amide added.

The lack of fat is the one deficiency of the multi-purpose meal, but is to be added when cooking. $12\frac{1}{2}$ oz. (dry weight) of the meal, 10 oz. water, and 1 oz. fat make one meal.

Dr. Borsook has taken much trouble in making

analyses of the meal, not only taking out figures for its own constituents but those of its combinations with added foods, such as beef, peas, potatoes, and milk.

In his description Dr. Borsook exhibits great enthusiasm for his product, especially for meeting food emergencies in Europe, although he is careful to add that he does not mean that the sending of meat and dairy products overseas would not serve a useful purpose. His point is, however, that it would be possible to discharge obligations to the people of Europe without sending any of these foods, and, as he says, as far as meat products are concerned, the necessity has to be faced now.

Apostle of the Potato

In a contribution to *A New Biology*, reviewed in this issue, Dr. Salaman, that distinguished research worker and F.R.S., has succinctly conveyed to the layman the dominant role played by the potato in man's economy. Fiction is indeed outbid by this account of the grim struggle for existence on Andean slopes 12,000 ft. up or more. Those primitives gained their foothold, cultivated frost-hardy species, made *chuño* as their first essay in potato dehydration, and bartered part of their harvest in trading with settlers on the arid coastal plains. "The Potato—Master or Servant?": it is an appropriate title, whether applied to those early days in South America or to the more recent era in Ireland, when dependence on the potato was the sole means of staving off starvation. As in transporting vanadium ore after the brothers Flannery first found it high on Andes, or as in carrying silver from the great Potosi mines, the tale becomes even more picturesque with the llama, one of the first domesticated animals, being called in as beast of burden for potatoes along the trade routes. The Potosi mines, too, come into this saga, for they were worked on slave labour sustained on *chuño*, from the sale of which the middlemen made their fortunes.

Famine, 1845-6

Dr. Salaman's essay serves also to recall the big disaster in Ireland of 1845-6. Whereas on this side of the Irish Sea the potato had made little headway, except in Lancashire and parts of Wales, the Irish found in it a complete food when supplemented by the little butter and milk usually available on smallholding and farm. "The shape of men's lives was literally fashioned by the potato; it took the place of money and dictated the size and tenure of their holdings." In the insanitary Irish hovel, shared communally with a cow, a pig or two, and a few chicken, this lazy, poverty-stricken existence went on, with the cauldron of potatoes perpetually replenished on the hearth. It went on until 1845, when the first blitz or blight of the fungus *Phytophthora infestans* brought disaster. It is believed that a million died of famine and disease; that a million others took the emigré's trail—like the unfortunate millions on the roads of Central Europe to-day, millions migrating to some land or other, offering, it is hoped, a bare sustenance. The theme of Dr. Salaman, with its high lights like the potato's virtues in vitamins C, B_1, and B_2 complex, with its dark shadows telling of those bloody sacrifices to the potato spirit of the primitive, and of those years of famine: all this will indeed surprise Mr. Everyman, hitherto believing the national encyclopaedia's dictum that the potato is "a useful if dull article of food."

Nutritive Quality of Wheat Proteins

That wheat is an important food and protein source is demonstrated by the fact that 30 per cent. of the total protein of the American diet was derived from wheat in 1941.

Within the limits of the method employed, a paper by E. L. Hove, L. E. Carpenter, and C. G. Harrel (*Cereal Chemistry*, XXII, 4, 287) shows the comparative distributions of the better quality wheat protein among the various products of the milling process, and the supplemental value of certain plant proteins to patent flour and whole wheat. In periods of shortage of good quality animal protein, both for man and animals, such data should be useful in planning a better and more efficient utilisation of the plant substances which show good protein quality.

Using the rat growth method with *ad libitum* feeding, representative fractions from the milling of commercially blended hard spring wheats were assayed for protein quality. Commercial feed samples of various plant protein concentrates were similarly assayed and detailed results given.

The New Wages Council Act, 1945

The Wages Councils Act, 1945, provides for the formation of Wages Councils, based on the old Trade Boards, but with alterations and additions, the fundamental alteration being that under the Trade Boards Acts only trades actually mentioned in the Acts and Orders came within the Acts, while now a Wages Council can apply to workers in and of any trade or industry, whether these are engaged in manual or clerical work.

A Wages Council can be established in certain circumstances by the Ministry of Labour. The Ministry can refer other cases to a Commission of Inquiry (formed under the Act) to decide whether a Council is considered necessary. Terms of reference would be to the adequacy of the existing machinery, if any, regulating conditions of employment.

Applications can also be made by certain conciliation bodies and jointly by organisations of employers and employees who are concerned in the settlement of remuneration and employment conditions.

Where a Wages Council is formed, it is responsible for proposals as regards remuneration and can propose holidays with pay (now for more than a week, the limit before this Act), these proposals being eventually translated into Wages Regulation Orders. A point of importance is that the old Trade Boards fixed a "minimum rate of wages," a Wages Council a "statutory minimum remuneration," this change giving a legal right for a Council to fix a guaranteed weekly wage if the Council so desires.

With modifications, the Control of Employment and National Arbitration Order, 1940, is continued until December 31, 1950, the real principle retained being that where terms and conditions of employment have been settled by negotiations between employers' organisations and trade unions, those terms and conditions (or others not less favourable) must be observed by any employer of the same trade or industry in the particular district.

Fortification of Cheese

Experiments in the fortification of pasteurised cheese with crude fish liver oil have been carried out at Zwartberg by the South African Government. The oils used were stonebass, shark, and stockfish, and were added during the emulsification process, the degree of fortification aimed at being 4,000 to 5,000 I.U. of vitamin A per ounce of cheese. The stonebass oil, which is the richest known natural liver oil, was diluted with arachis oil.

Some of the cheese fortified with stonebass oil was packed in hermetically sealed tins, and some was wrapped in tinfoil in ounce packages. The whole was stored for eight to twelve months at 85° F. The cheese in hermetically sealed tins was quite sound even at the end of the year. It was very uniform in colour and texture and of excellent flavour, which was stronger and more mature than in freshly made cheese. One tin was stored for a further two years, when the flavour was still stronger. The ounce packages showed superficial deterioration due to disintegration of the tinfoil, but the cheese was of good flavour, though rather tough as a result of loss of moisture.

The cheeses fortified with shark and stockfish liver oil were packed in vent-top lacquered cans, with tinfoil liners, and stored for five weeks at 98° F. This pack was unsatisfactory. At the end of the storage period mould and discoloration had set in at the surface of the cheese, though the interior was sound and of excellent flavour.

It was expected that some vitamin A would be lost by oxidation during the emulsification process, and the results showed that this loss amounted to approximately 10 per cent. No oil separation occurred in any of the fortified samples—not even in the one fortified with low-potency stockfish liver oil, which amounted to 2 per cent. of the cheese. The tests showed that the undesirable pungent fish flavour of the crude oils was completely hidden except in the sample containing low-potency stockfish liver oil, in which case a suspicion of fishy flavour could, with difficulty, be detected.

Zoo Diets

One sign of return to normal days will be the reappearance of those travelling menageries of the Continent, which have almost vanished, and the expansion of exhibits in our own Zoological Gardens. Already lion cubs are being collected in Africa for the former, and offers of additions being accepted for London's zoo. Such a return to peace-time conditions will depend, however, on food supplies, a problem perplexing enough in days of plenty with inmates ever subject to the strangest of fads or fancies. Tigers and lions must have their joints of horse flesh from the zoo butcher's shop, which on warm days attracts so many bluebottles—duly entrapped as the very thing for the palate of some species! But what of the elephant, at one time fed by his *mahout* with piles of oat-cakes, with salted raw rice, greens, and sugar, and later accustomed in London and Whipsnade to a mere daily ration of 200 lb. hay, corn, and roots, plus innumerable buns, biscuits, and bananas offered as dessert by his admirers? A large zoo requires hundreds of pints of shrimps for the flamingoes; thousands of eggs, thousands of pounds of fish, of evaporated milk, oranges, lettuces, bananas, and even odd consignments of dehydrated flies. Occasionally our animal friends give something in return, like the tiger cutlets and elephant steaks (at 34 shillings a pound!) consumed during the Siege of Paris; or like an occasional ostrich egg in more recent times, an egg blown by force-pump into a large basin to be divided amongst the keepers' families. But against this occasional lend-lease must be set not only the lavish supplies already mentioned, but special diets like the baby snakes fed via pipette with raw egg; or those pandas ignoring all offers in experiments to find their customary food and turning with relish to bread and milk never encountered before. To be added, too, are those consumptions due to curiosity: like the baby walrus which consumed the coat-tails of its owner while *en route* to Regent's Park; or those ostriches which swallowed keys and coins, bus tickets and match stalks, part of a necklace, three gloves, plus a pencil, a comb, or a film spool or so to vary the diet.

The Story of FAO

"Whether FAO amounts to anything depends on what use the Governments and peoples make of it," said Mr. Pearson, Chairman of the Conference which ended at Quebec on November 1, after delegates of 36 nations had agreed on a programme for achieving the goal of banishing hunger and want from the world.

F. LE GROS CLARK, M.A.

IT is not the purpose of this article to examine the constitution of the new international agency known as the Food and Agriculture Organisation (FAO); those who wish to study its constitution will find it published with an ample commentary in the papers issued from the secretariat. It is of more immediate interest to ask why the organisation should have emerged in its present shape at this stage in our social and economic development, what were the movements that preceded it, and what chance it has of fashioning a "freedom from want" economy in a suffering world. Let us, in brief, review scientifically the whole historical and social conditions of FAO. For we shall obviously have to adapt our practices in some measure to this novel and pervasive institution.

Functions of the FAO

During the whole period of its growth, under the interim commission established at Hot Springs in the early summer of 1943, it has had to moderate such claims as it might have advanced to be an operative body. Its functions seem at the moment to be little more than advisory. But anyone who offers advice to-day must be in a position both to collect and to publish all the relevant facts and statistics; and an organisation that deals in hard facts and figures has at least some chance of getting public opinion behind the advice it offers. No one can say as yet what will be the decisive forces at work in forming the policy of the organisation, but there has, of course, been some discussion on the matter. L. B. Pearson, the Canadian chairman of the interim commission, remarked in one place on the importance of the Director-General. "He can," he said, "either mould FAO into a respectable fact-finding body, following discreetly in the rear of world opinion, or into a dynamic force, clearing the road towards a better fed and healthier world," and he added some reference to the contrast between a supply truck and a bulldozer. This is true enough as far as it goes; and, as Pearson himself suggests, anyone who had experience of the workings of the League of Nations or of the International Labour Organisation will look closely into the organic structure of the new body. But no part of its structure is really of greater value than any other; and we have to remember that the organisation is itself conceived as a part of the more inclusive structure of World Security, and that its success depends in great measure upon the financial arrangements and the various commodity agreements to which the countries of the world will be committed. The whole system will have to be a complex one; and, at the time of writing, its diverse organs are still suspended in a kind of fluid solution within the limbec of maturing and contending policies.

Social Trends

Let us for the moment examine the social trends that have been leading for the last twenty years towards the conception of an international body of this nature.

We have to realise that every discussion upon food tends to shift fatally into a discussion mainly upon agriculture, and that for the obvious reason that the producer of food and farm commodities is an economic unit, whereas the consumer of food is merely a member of the human race. Most governments are concerned with farm prices and with the condition of their primary producers; and in the last twenty years their concern has deepened as the world market in primary products became less and less secure. The motives that have impelled governments to their interest in the soil and those that labour on it have varied from region to region. In some instances the country's economy is based on the export market in farm products; in others the peasantry compose a large proportion of the country's population and may be looked upon as its basic source of man power; and in countries least affected by agriculture the farming community represents at all events a voting force in the constituencies.

Science of Human Nutrition

Whatever influence the emergent science of human nutrition may have had upon governments over the last decade or so, the facts are inescapable. That science has been effective only where it has been assimilated into the movement among the farming communities of the preponderantly agricultural nations towards an expansion of the market for primary products. By the early 'thirties the problem had been fairly well defined. The depres-

sion was fundamentally one that affected the primary producers; and the problem of foodstuffs that found no effective market could be solved either by a systematic restriction of production or by a systematic expansion of the market itself. Most of the commodity agreements then attempted had a restrictionist basis. A basis of this kind was the simpler technique to adopt, because it could in theory be operated by each of the contracting parties and it implied only a measure of agreement between a limited number of producing countries. The risk was that it would never work in practice and that even in a single country it was extremely difficult to apply. No farmer wants to limit his cropping plans; and if some method of expanding the consumer market could be discovered everyone would have been relieved.

It was not entirely a matter of chance that the first positive proposal came from Australia. A restriction in the output of wheat, sugar, and other farm products was of no value to Australia, whose farm economists, it may be noted, moved freely in British and American scientific circles. In both these countries there had already been some effort to dispose of milk and other surplus products along the channels of relief or through special devices such as the subsidised provision of milk to school children. Schemes of this nature were, of course, developed further in the following years, particularly in the United States, but they had only internal application and were of little immediate use to countries with a large exportable surplus. Their benefit to the farming communities was, however, tolerably clear, and they had, moreover, the advantage of possessing a strong medical and social appeal. Were not the ill-nourished and the unemployed having some of the foods they needed?

Australian Views

The movement in Australian thought is usually associated with the name of F. L. McDougall; he should have credit for the leap in human affairs that was expressed in the concept of a "marriage of health and agriculture." Bruce, the High Commissioner, taking his brief from McDougall and enriching it from his own store of experience, laid before the League Assembly in 1935 the proposal to relieve agriculture of its excess output by directing the products into the stomachs of the underfed communities. The result of this intervention was the establishment of the mixed committee, which subsequently published a series of reports. McDougall's argument was mainly directed toward the European market; Asiatic impoverishment was at that time admitted readily enough, but there was little precise knowledge, and the mixed committee concentrated such as there was into a few pages of its final report. As far as the large overseas wheat, maize, and wool producers were concerned, the perverse feature in the European economy was its turn to self-sufficiency. No one could mistake the political meaning of this; and in the issue it not only forced back the Continent from a diversified towards a relatively cereal and potato type of diet, but deprived the overseas grain producers of their natural market. As McDougall and the American writers had suspected, the evidence of consumption surveys began to show fairly conclusively on what a low-grade diet much of Central and Southern Europe was subsisting. It would be too much to say that the war has been fought to make these regions a secure market for overseas cereals and sugar, but the prevailing tone of some of the American commentaries suggests that there will be a strain of disillusion if the war does not have at least this outcome.

European Nutrition Policy

There was nothing medically improper about the proposal, even if the motive power behind it was mainly agricultural. Someone had to form the pressure group, and plainly the physiologists and medical men, who supported the nutrition policy, were in no sense a large and organised economic body within any of the nations. Only by persuading the Central European farmer off cereals and sugar beet and on to dairy husbandry and stock rearing was it practicable to raise the physiological value of the average European diet. Naturally the reformist school came in for some criticism from the food interests, as did their colleagues in the States. Tolley, for example, later to take charge of the Agricultural Adjustment Administration in that country, found himself during the early 'thirties in conflict with the dairy interests over his policy of diverting surplus fodder to an increase in milk production. The problem grew somewhat complex, as it usually tends to do in farming affairs, where the interests of diverse commodities have to be reconciled. There is always the question, what will happen to the meat producer if a certain policy is followed through with wheat, or what will happen to pigs where the level of milk production is to be raised? More especially in the 'thirties there was the doubt whether one had best leave the partial security of a restricted output for the experimental chances of a surplus disposal policy.

The Hot Springs Phase

When the Hot Springs phase of the movement came in 1943 and was succeeded by the long dispensation of the interim commission, it was evident that discussions were permeated by this same fatal bias toward the producer aspect of the problem. The conference at Hot Springs was naturally conveyed to its gathering place from the four winds upon the prevailing ideas about an economy of abundance, freedom from want, the ill-fed and ill-clothed half of the human race, and all the rest of it. McDougall, Tolley, and their friends had been insistent in Washington during the autumn of 1942

that freedom from want of food ought to be recognised as the most important of the freedoms for which the world was craving. No one was prepared to deny it, and in any case food was a matter that could be discussed concretely and submitted to precise statistical treatment. But the outcome of it was that the whole range of farm and plantation products was ultimately assimilated into the scope of the projected organisation, and it began to spread over fibres and forestry and, logically enough, to fisheries. As far as the soil and the products of the soil are concerned, it seems likely that the organisation will have to embrace them all. Patently, if the problems of soil conservation, for instance, had to be studied (and this has become a matter of deep interest to several governments), then it was impossible to exclude such subjects as afforestation or the use of soil-conserving crops whether for food or industrial purposes. If the well-being of farming communities was to be considered (and no one ventured to evade the problem once it had been raised), then it was impossible to concentrate merely upon the food-producing populations and to ignore those to whom wool, cotton, and jute are rather more than matters of negligible significance.

Farming Economics

It might be suspected that the new organisation was in danger of being swamped by farming economics. A few American observers have marked the drift in that direction. "What we are in prospect of getting," remarks Professor J. D. Black, of Harvard, "is a foundation laid for an enduring all-inclusive agricultural organisation that also concerns itself with the consumption of agricultural products and the resulting effects on health." But there have been other movements in social thought playing their part, and we shall have to estimate their importance. For the moment it is as well for us to realise that what we have been witnessing is essentially an *agrarian* protest; the energy behind the whole movement has come from those men who embody the interests, hopes, and perturbations of farming communities in the more advanced producing countries. Their influence naturally spread to a greater or lesser extent among farming economists and soil and livestock scientists in the countries of Latin America and Eastern Asia. The problem in these countries was frequently a distinct one; in them the producer and the consumer were for the most part the same person, and their problem was less that of the failing overseas markets than that of the prevailing poverty and the low standards of farming. Yet what McDougall, Tolley, and their friends had realised was that the problem as a whole had to be handled on a grand and global scale; and this vision released the minds of the economists and the soil scientists on schemes of soil conservation, irrigation, stock selection, and the improvement of pasture lands, that would have been looked upon as impracticable even less than a decade ago.

There is thus a slow revolution in ideas at work among the farming populations of the world, and this revolution both found its expression in the movement that has culminated in FAO and drew fresh vigour from that movement as it passed from stage to stage. We have now to consider what further currents of restless human thought were contributing towards the complex mixture of theories and plans that make up the nature of the new organisation. They intertwine and commingle over a period of twenty years, but they finally meet in this attempted synthesis.

(*To be continued*)

Control of Pasteurisation

THE recent paper* on Temperature Control in Milk Pasteurisation by Mr. R. A. Hill, B.Sc.(Eng.), was divided into three main sections dealing with (1) milk pasteurisation and legal requirements; (2) old and new types of pasteurising plants used in the dairy industry; and (3) the types of control instruments necessary, particularly those designed to assist in ensuring that the legal standards are at all times maintained.

The author describes the early so-called "holder system" using a pasteurising temperature of 145° F. and a holding time of 30 minutes, and also a typical lay-out for the latest type of plant, known as the H.T.S.T. pasteurising plant, in which the milk is heated to 162° F. and held for 15 seconds.

The instrumentation of milk pasteurising plant can be traced from the commercial application of the process in this country some twenty-two years ago; the proportional type of controller, with or without relay operation, was the only kind then being produced seriously at a reasonable price.

The problem of control of the holder and short-time systems is contrasted by the author in detail. Instruments of a very high working standard are required on the short-time pasteurising plant. They must be robust and suitable for the steamy atmosphere of dairies; bulbs and fittings placed in the milk-flow have to be of sanitary design and of proportions capable of being sterilised without damage or any permanent set in the temperature reading after sterilising. Capillaries must be well reinforced to prevent damage resulting from the routine daily cleaning.

The safe working of the short-time pasteurising process depends on the instruments, and it has been stated that the commercial application of short-time pasteurisation was delayed partly because of temperature control difficulties.

In most spheres the trend of design is towards fully automatic control and the removal where possible of the human element. Undoubtedly in time dairy plant will receive more attention with this end in view.

* *Paper presented at a Joint Conference of the Institution of Chemical Engineers with the Institute of Physics and the Chemical Engineering Group of the Society of Chemical Industry held at the Royal Institution, London, on October* 19, 1945.

Gas-Packing in Rectangular Tins

The essential features of the technique of gas-packing are described in detail together with explanations of the more important precautions that have to be observed.

R. DAVIES, J. C. FIDLER, and R. GANE

IN CO-OPERATION with certain firms, a simple, if somewhat laborious technique, has been developed and used extensively whereby tins are sealed hermetically so that the contents can be maintained in an inert atmosphere. The following account refers to 4-gallon tins $9\frac{1}{4}$ in. × $9\frac{1}{4}$ in. × $13\frac{5}{8}$ in., but the essential features are the same for any other size of container.

The main stages of the entire operation are (*a*) sealing the container, (*b*) filling with inert gas, (*c*) testing the sealed container for gas tightness, and (*d*) lacquering. At the first three stages skilful soldering is required, but this and other operations have been made so simple that relatively unskilled labour can carry out the whole process.

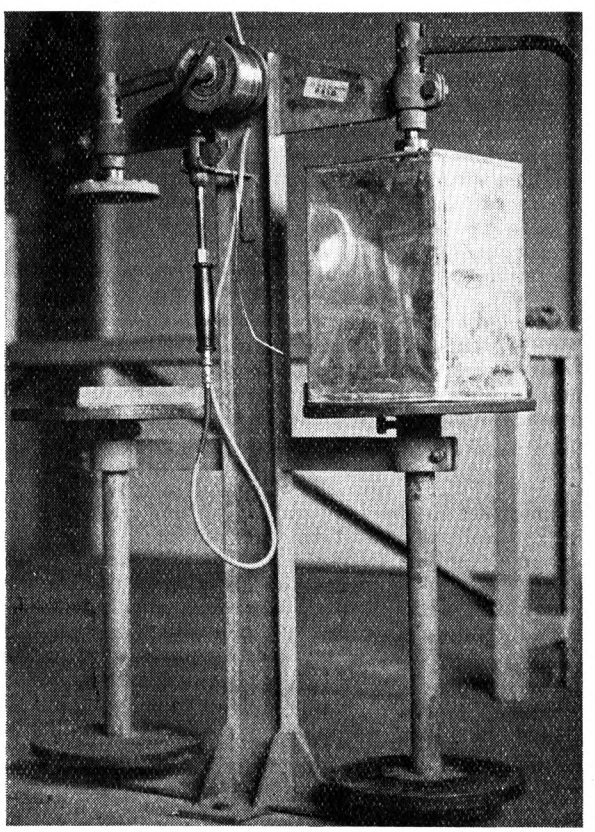

Equipment for soldering tagger plates, consisting of stand with two foot-controlled turntables, cramps for holding tagger plates in position, gas-heated soldering iron, and spool of wire-form solder.—*Crown Copyright Reserved.*

For the container to be robust and of rigid construction, it is made from IX tinplate ·015 in. thick and has the ends and body pieces held together by double-locked soldered seams. To secure gas tightness the film of solder should penetrate at least through the first lap of the seams and preferably through the second lap. Slack seams filled up with solder are in general more prone to leak than tight seams, and furthermore do not withstand the hazards of handling and transport. The makers obtain the desired penetration of solder either by prefluxing the seams before closing or by using a penetrating flux, together with some preheating of the seam before the application of solder. Each tin is tested for air tightness after manufacture.

From the time the tins are made until they are filled and packed into crates or cartons reasonable care has to be exercised in handling, since deformed tops are difficult to close and seal, while damaged seams are potential points of leakage.

Sealing the Container

After the required weight of product has been placed in the tin it is closed with a lever lid, $5\frac{1}{2}$ or 6 in. diameter. The lids are usually a tight fit and must be forced evenly into place so that the tagger plate can be fitted into its recess for soldering. Some form of ram with a metal or wooden disc fitting inside the lid is used to avoid damage to the tagger plate recess and to ensure pressing the lid home evenly. This recess is $\frac{1}{16}$ in. deep and concentric with the opening in the top of the tin.

When the lid has been fitted the top of the tin is freed from dust and powder before proceeding to solder the tagger plate in place.

The design of tagger plate finally arrived at is a disc $6\frac{3}{4}$ or 7 in. diameter, with an edge $\frac{1}{8}$ in. deep turned down at 60° from the plane of the disc, and is cut from tinplate of 70 lb. base weight (·008 in. thick). Thinner plates are too fragile for safeguarding the contents of the tin and are difficult to handle in that they buckle under the pressure required to make close contact with the top of the tin and distort when heated with a soldering iron. Heavier plates are hard to cut through when the tin is opened.

For convenience, the tin is mounted on a turntable which is either foot or power operated. The tagger plate is held firmly down in the recess with

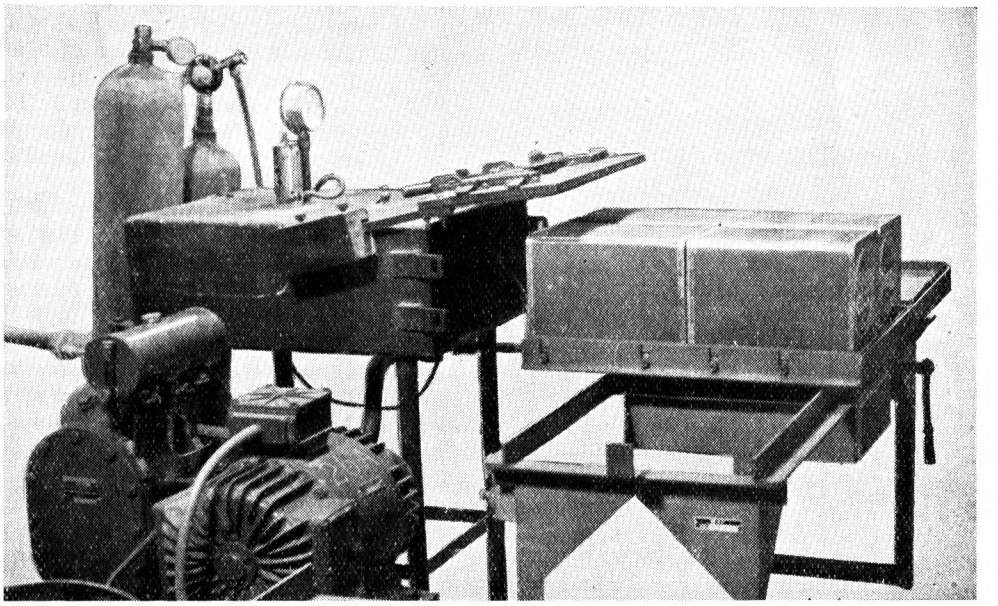

Gas-packing equipment consisting of a cabinet to hold four tins, vacuum-pump and gas cylinders. *—Crown Copyright Reserved.*

a load of 20 to 30 lb. applied by a loose weight or by a cramp. Nearby there is a supply of the flux, the iron-cleaning fluid, a rest for the soldering iron, and a holder for a spool of wire-form solder.

The flux generally used is "resin-in-meths" (1 part by weight of resin and 10 parts by weight of methylated spirits), and it has been noticed that better results are obtained with a pale amber-coloured grade of resin than with a dark-coloured grade. An alternative and very effective flux is a solution of zinc-ammonium chloride (10 parts by weight of zinc chloride, 1 of ammonium chloride and 15 of water; to the solution is added $\frac{1}{4}$ to $\frac{1}{2}$ per cent. by volume of wetting agent). The wetting agent can be either Perminal Col. (I.C.I., Ltd.) or Teepol X (Technical Products, Ltd.). Since the zinc-ammonium chloride flux is corrosive it should only be applied sparingly by transferring from a moist pad by means of a short bristle brush or a piece of cane.

The fluid used to clean the soldering iron is the same as the corrosive flux described above without the addition of a wetting agent, or a 25 per cent. solution of dibasic ammonium phosphate.

By using solder in wire form, of about 14 s.w.g., there is a considerable saving of time and material. An Argent solder (T450 or T400) has been found very satisfactory, and 1 lb. is sufficient to seal 30 to 40 tagger plates. The other seals made with solder, including repairs made to leaking tins, reduce the number of tins to 24 to 30 per pound of solder.

The most convenient soldering iron to use has a hatchet-shaped bit, weighing at least 6 oz., with a chisel-shaped edge about $\frac{3}{4}$ in. broad. Both gas and electrically heated irons are effective if the surface temperature of the tip can be maintained from 70° to 100° C. above the "liquidus" temperature of the solder throughout the operation. Thus with Argent T450 solder having a solidus temperature of 178° C. and a liquidus temperature of 218° C. the surface temperature of the tip of the soldering iron should be at least 290° C. for satisfactory working. Copper bits require re-edging at least once a day, and this sharpening, together with the solvent action of the solder and corrosion by the cleaning fluid, results in rapid wearing of the bits. The 6-oz. size of copper bits used in a number of factories in this country solder, on the average, about 750 tagger plates before they have to be discarded. Attempts to find a better alternative material than copper for soldering bits have so far been unsuccessful. Copper bits that have been nickel-plated sometimes last much longer than unplated ones, since they are less susceptible to erosion by the molten solder, but in many cases there is a tendency for the plating to separate from the copper and the thermal conductivity is greatly diminished.

Replacing Atmosphere by Inert Gas

The tins are perforated, placed in a steel cabinet which can be exhausted, and then filled with nitrogen through a three-way "Audco" cast-iron lubricated plug valve. To indicate the rate at which the cabinet is exhausted and filled a compound pressure-vacuum gauge, 6 in. diameter, is fixed to the cabinet, and a short-form mercury manometer is used to indicate the lowest pressure obtained in the cabinet (2 to 3 mm. of mercury).

The size of the cabinet depends on the number of tins to be exhausted at one time, but in any case it is advisable to keep the free space as small as possible, both to conserve nitrogen and to reduce

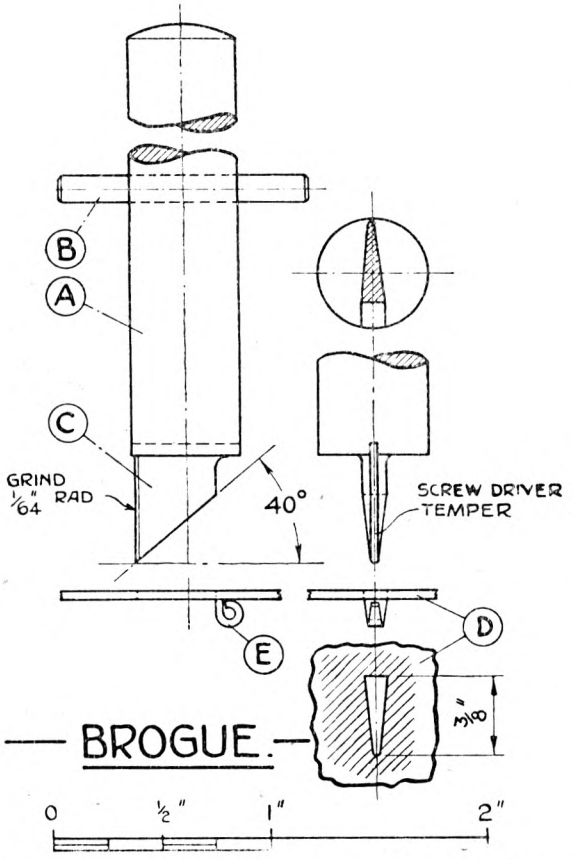

Fig. 1.—Brogue used to cut slits in tins. A—handle, B—bar to prevent tool rolling off table, C—blade of tempered steel, D—tinplate, E—curl of metal cut from slit.

the time necessary to exhaust the cabinet. A cabinet for four tins measures approximately 29 in. × $19\frac{1}{4}$ in. × 10 in. internally, and one for six tins $43\frac{1}{2}$ in. × $19\frac{1}{4}$ in. × 10 in.

The degree of gas tightness required of the cabinets is such that when an empty cabinet is exhausted to an internal pressure of 4 mm. of mercury and the valve closed, the pressure does not increase by more than 4 mm. in an hour.

Single-stage rotary vacuum pumps are used, such as the 4 in., 6 in., or 8 in. "Geryk" pumps, and the choice depends on the size of cabinet to be exhausted.

The rate of evacuation of the cabinet and also that of recharging with nitrogen cannot be increased beyond a definite limit, which is fixed by the size of the perforations (brogue holes) in the tins. When the holes are small the pressure differences set up may be large enough to distort the tins permanently and to cause the seams to leak. This danger is greatest during the recharging process; the actual times are about 1 min. and 4 to 5 min. for evacuating and recharging respectively.

The most satisfactory type of brogue hole is a tapering slit about $\frac{3}{8}$ in. long and $\frac{1}{16}$ in. to $\frac{1}{32}$ in. in width, and two such slits are made in each tin. By using a slit instead of a number of small holes the danger of choking up is reduced and it is easy to cut and to solder up. The tool illustrated in Fig. 1 cuts a slit of the required shape and size and leaves the piece of metal cut away still attached to the tin.

Even when using slits of the recommended size and without exceeding the suggested rates for exhausting and filling the cabinet it is possible to subject the tagger plate to severe strains if the lever lid below it is a tight and close fit. In extreme cases the air between the lever lid and tagger plate cannot escape and a pressure difference of 14·5 lb./sq. in. may be set up when the cabinet is exhausted. Pressures in excess of 12 lb./sq. in. have been measured in the laboratory. The necessity for sound tagger soldering is quite obvious. It is partly for this reason that the test of tins for leaks is carried out after gas-packing.

When the cabinet is recharged with nitrogen it is essential that the pressure inside it should be held at 1 to 2 lb. per sq. in. above atmospheric pressure before it is opened to ensure that each tin is completely filled with inert gas.

After the tins have been removed from the cabinet the brogue holes are sealed by drawing solder along the slits from $\frac{1}{4}$ in. beyond the narrow end to a similar distance beyond the broad end, with a soldering bit about $\frac{1}{2}$ in. wide. One slow, steady movement along the slit will seal the opening without any solder running through into the tin. With a slit of the size described above solder will drop through into the tin if the iron is moved backwards and forwards along the slit. Up to 5 min. can elapse before the brogue holes are sealed without detriment to the pack, provided that the sides of the tins are not flexed.

Provided that the minimum pressure in the cabinet is reduced to 3 mm., the oxygen content of the filled tins should not be more than 0·3 per cent. higher than that of the gas used to refill the tins; thus with nitrogen containing about 0·5 per cent. oxygen, gas-packs of 0·8 per cent. oxygen can be readily obtained. Oxygen inside the hollow particles of spray-dried milk powder is not removed when the tins are exhausted, and diffuses out more or less rapidly, so that initial packs containing 1 per cent. of oxygen equilibrate to 2 to 3 per cent. after a short time, depending on the type of powder.

Testing the Tins

The tins at present available cannot all be guaranteed to be free from leaks after passing through the operations involved in gas-packing, and in order that as little material as possible shall be spoilt through failure of the gas-pack it has been found necessary to test each tin after gas-packing. This is carried out by puncturing the tin and in-

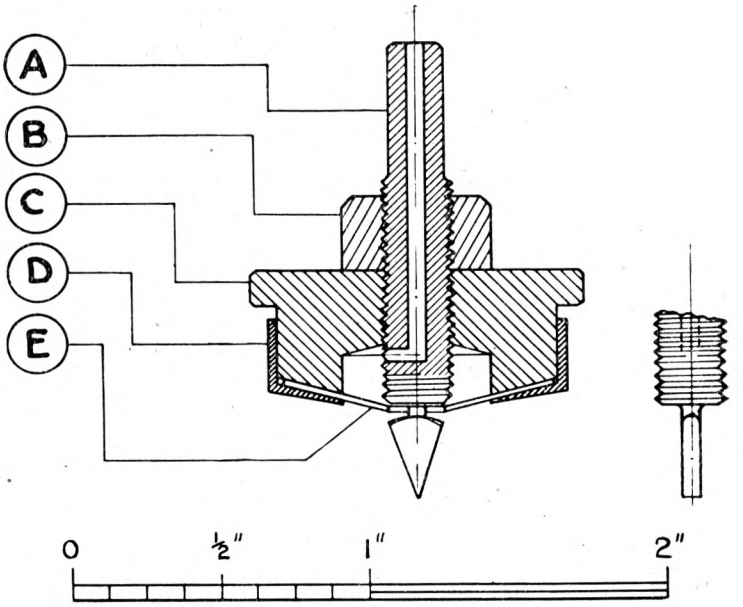

Fig. 2.—Can-testing tool suitable for any type of can. A. Snow. Brit. Pat. No. 555,872.

A. Gas connection.
B. Locking nut.
C. Body of tool.
D. Washer retaining cover.
E. Rubber washer.

In use, the point of the tool is pushed into the tin and then locked in position by rotating through 90°. It is detached by rotating through a right angle again and the point withdrawn.

flating it with nitrogen to a pressure of 2 to 2½ lb. per sq. in., and then immersing the tin in a tank of warm water. A variety of testing tools is used; that shown in Fig 2 is suitable for any tin, and that in Fig. 3 is in fairly general use with rectangular tins. One firm has found it more convenient to fit an attachment over one of the brogue holes and then inflate the tin. With clean water in a tank painted white inside and well lighted by shaded lamps just above or just under the surface of the water, it is possible to detect a leak of 60 cubic millimetres/min. Leaks as small as this may either appear as a silvery hair apparently attached to the point of leakage or as an adherent bubble which slowly grows in size.

After testing, any leaks that are detected are repaired and re-tested. The hole made by the probe of the testing tool is sealed in the same way as the brogue holes, but since this seal will not be tested it should be carefully carried out.

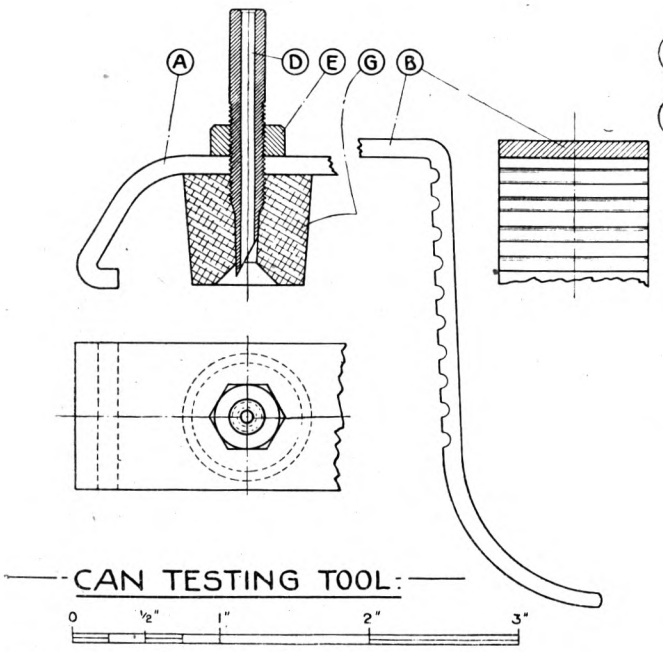

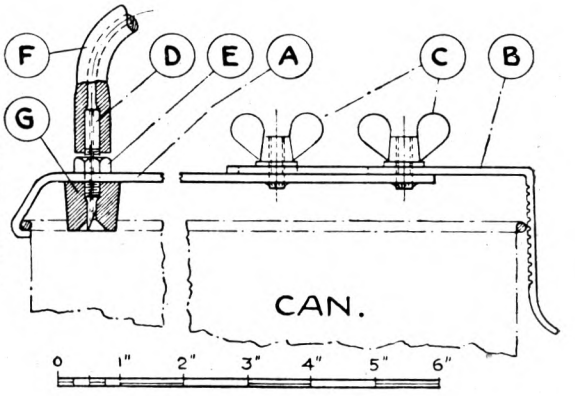

Fig. 3.—Can-testing tool for use with rectangular cans.

A. Hooked end of bar to catch on rim of can.
B. Ratchet end of bar to lock on to rim at other end of can.
C. Adjustment for various lengths of cans.
D. Probe.
E. Locking nut.
F. Connection to supply of gas under pressure.
G. Rubber stopper to make gas-tight connection at surface of can.

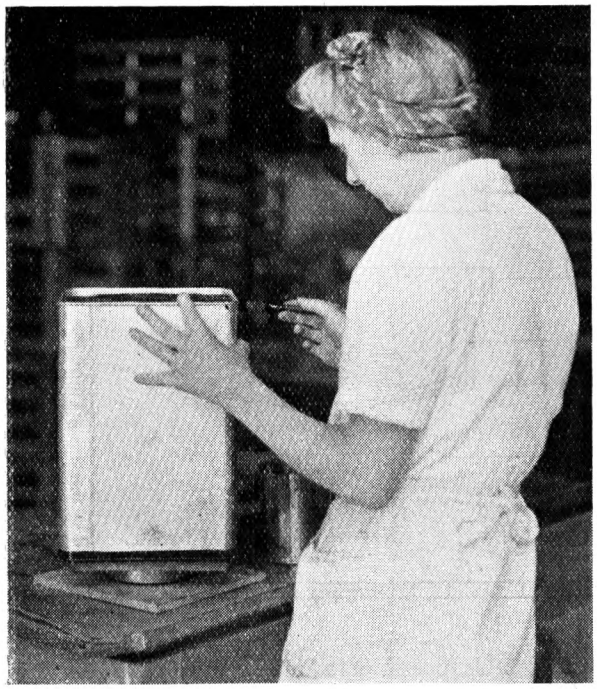

Lacquering soldered areas of a can after gas-packing. A turntable is used to facilitate handling of can.—*Crown Copyright Reserved.*

Analysis of Gas in Tins

A sample of gas taken from the tin is analysed for oxygen by means of an Ambler, Haldane, or Orsat gas-analysis apparatus. When the inert gas is nitrogen it is customary to use only alkaline pyrogallol and to consider that all the gas absorbed is oxygen. This is sufficiently accurate for most gas-packs, since there is only a trace of carbon dioxide in the tins if examined within a short time after gas-packing.

Lacquering

As a precaution against any breakdown of soldered areas during storage and in transit all such areas are painted over with a bitumen lacquer. Special lacquers have been made which when tested on known leaks were found to seal over 90 per cent. of the medium and small ones. These lacquers remain slightly plastic and will reseal even when a hole has been blown through the film over a leak.

It is desired to express acknowledgment of the assistance given by various firms, including Messrs. Aplin and Barrett, Ltd., Messrs. John Feaver, Ltd., The Metal Box Co., Ltd., and The Scottish Milk Powder Co., Ltd.

NOTE.—*This article is published by permission of the Department of Scientific and Industrial Research and the Ministry of Food.*

Some Honey Off-Flavours

R. W. MONCRIEFF, B.Sc., A.R.I.C.

IT IS well known that the types of flowers from which bees extract the nectar determine the flavour of the honey. The flavour derived from heather is universally appreciated, and heather honey will command a higher price in the market than any other varieties. I remember late last summer watching the bees amongst the heather from their hives under the lea of a stone wall on the slope of Jeffery Hill in the Lancashire fells. The inexhaustible supply of bloom, the pure air, and the clean surroundings prompted the reflection that such conditions must be heavenly for the bees. Doubtless they are, but bees thrive and produce honey under conditions which must seem a little discouraging.

London Bees

Bees are kept in London, and if their honey is a little off-flavour, who would be surprised? There are so many possible sources of contamination. If the honey had an after-taste reminiscent of cats, even strongly suggestive of the urine of tom-cats, could the bees be blamed? This state of affairs has in fact arisen. A colony of London bees resident, of all places, in Kensington and adjacent to the Gardens, have been producing honey with an after-taste distinctly feline. And who gets the blame? The reader would never guess. Amazingly, it is the Tree of Heaven.

There is, however, an extenuating feature. The new honey has a persistent after-taste of cats, but if stored like wine or cheese before consumption the bouquet improves. The odour of cats fades and finally disappears, and is replaced by a delicious rich muscatel odour. Here, then, is a case which suggests that bee-keepers, instead of feeding back to their bees honey with an off-flavour, might do well to store it and see if the bouquet improves as it matures.

The story is to be found in a communication from Dr. R. Melville of Kew (*Nature*, 1944, **154**, p. 640), in which he describes how honey from an apiary near Kensington Gardens had an unusual

flavour. The honey was pale brown with a distinct greenish cast, and after three months in store set with fine granulation. On tasting, the first impression was of a mild floral bouquet and this was followed by a persistent after-taste of cats. It recalled the catlike odour given off by elder-flowers, *Sambucus nigra*, when drying, and suggested that elder-flowers might be responsible.

The Tree of Heaven

The pollens were obtained from the honey by dilution with water and sedimentation, and were examined, but elder-flower was not detected. It was found, though, that 44 per cent. of the total pollen came from the Tree of Heaven, *Ailanthus altissima*, which is commonly grown as a street tree in Kensington, and which has male flowers with a strong unpleasant odour recalling that of elder-flowers. The second major constituent was the sweet chestnut, *Castanea sativa*, whose flowers also have a strong unpleasant odour. This was in the 1943 honey, and the unpleasant aroma might have been due either to the Tree of Heaven or to the sweet chestnut. The 1944 honey from the same apiary again had the unpleasant after-taste, but the pollen count showed that although the Tree of Heaven was still the biggest constituent, the sweet chestnut was now very low and the second major constituent was privet, *Ligustrum vulgare*. Now, it is known that privet gives a coarse flavour to honey and it is a common occurrence to find it, but privet does not give an after-taste of cats. The pollen counts were:

	1943. *Per Cent.*	1944. *Per Cent.*
Tree of Heaven	44·0	37·7
Sweet chestnut	26·0	3·7
Privet	6·2	28·8
Limes	6·6	4·0
Willow herb	0·6	8·8
Horse chestnut	0·6	1·7
Miscellaneous	16·0	15·3
	100·0	100·0

It seems clear, therefore, that the unpleasant after-taste was due to the Tree of Heaven. Off-flavour of unknown origin in honey is often attributed to honeydew being present in the honey; in such cases it is not the honeydew itself which causes the off-flavour, but the sooty moulds that it supports. There was little honeydew in the honeys under discussion.

Although elder-flowers have the unpleasant odour, yet when quite dry their odour changes to a pleasant aroma, and they are used in medicine and cosmetics, and also in some food products to impart a muscatel odour. The change may be due to oxidation of the essential oil in the flowers. With this in mind, Dr. Melville examined the 1943 honey from time to time, and found that by July, 1944, the catlike after-taste had entirely disappeared and had been replaced by a rich muscatel flavour.

Another View

The view that the after-taste reminiscent of cats was derived from the Tree of Heaven was questioned by Mr. C. Farmiloe (*Nature*, 1945, **155**, p. 80), who, in addition to being a perfumery research chemist, has also been a London bee-keeper for eighteen years. He points out that the bulk of the honey flow from London, particularly the parks, is derived from limes, *Tilia Europea*, and the privet hedges, *Ligustrum vulgare*, while since the war the appearance in London of the willow herb has modified the honey, making it paler and sweeter. In this connexion it is interesting to note that the Kensington honey of 1943 gave a willow herb pollen count of only 0·6 per cent., whilst that of 1944 gave a corresponding count of 8·8 per cent. The honey flow in London from the horse chestnut, the sycamore and the maple may be substantial, but as these come early in the year their nectars are consumed in brood-rearing and are not stored. London honey, therefore, comes mainly from limes and privet, and Mr. Farmiloe attributes the catlike odour of the Kensington honey to privet, since it can be detected in country honey where privet is about but where there are no Trees of Heaven. To support this view he points out that in Marketing Leaflet No. 31 (Ministry of Agriculture and Fisheries) "Honey Grading and Marketing," privet is quoted as giving an unpleasant taint. As regards the pollen count, he thinks this may for various reasons be deceptive. For example, pollen from grass, poppies, and plantains, which have nothing to do with the nectar, gets into the honey, while a lot of nectar-producing flowers have little pollen—for instance, the limes. He considers pollen-count to be an unreliable guide if it is used to establish more than the country of origin. Mr. Farmiloe points out that he keeps twelve stocks of bees at the Zoo, Regent's Park, and as a bee-keeper he knows that they take their honey from the horse-chestnut, willow herb, privet, and lime, yet a pollen analysis gave the following results:

	Per Cent.
Red or black currant ...	20
Lilies	15
Aubretia	7
Laurel	7
Poppy	6
Hyacinth	6
Tulip	6
Asters	6
Lime	5
Willow herb	5
Hollyhock	5
Others	12
	100

He points out, too, that *Ailanthus glandulosa,* which is the natural food plant of the Chinese ailanthus silkworm, has a smell of mice. The larvae of the silkworm do not smell, but the newly emerged moth smells strongly of mice. A further point of interest is that E. K. Nelson of the Bureau of Chemistry and Soils, Wood Research Division, Washington, has been able to detect methyl anthranilate in orange-blossom honey, and such a chemical approach to the problem may be more serviceable than the pollen count.

Reliability of Pollen Count

The attraction of the musky scent of the male flowers of the Tree of Heaven for bees is also noted by C. Elton, Bureau of Animal Population, Oxford (*Nature,* 1945, **155,** p. 81).

Dr. Melville replies (*Nature,* 1945, **155,** p. 206) to Mr. Farmiloe's criticisms. He considers that the bee-keepers' preconceived ideas of where the bee obtains its nectar may be erroneous. The limes provide fairly abundant pollen, and if they were a main source limes should be high in the pollen count. The method of chemical identification is in its infancy and it may not be easy to develop, and generally he considers that a good indication is given by the pollen count. For example, a honey was pronounced by an experienced judge of honey to be one of the best raspberry honeys he had encountered, and on pollen count gave 79 per cent. raspberry pollen. It is true that in some cases the pollen count may mislead—*e.g.,* the garden catmint has sterile anthers and no pollen can be gathered from it. In the case of the *Ailanthus* the female flowers have no pollen.

As regards the after-taste of the Kensington honey, he cannot agree that privet is responsible for this, since the odour is much stronger than that associated with privet honey and is reminiscent not just vaguely of cats but of tom-cat urine. Further, privet honey does not ripen to a muscatel bouquet. Again, the 1943 and 1944 honeys had 6·2 per cent. and 28·8 per cent. respectively of privet pollen, yet their after-tastes were similar, not markedly different, as would be expected if privet were the responsible factor. Then, again, the colour of privet honey is dark with a greenish cast, whereas the Kensington honey was pale amber with a more definite green tint.

Special Dehydration Number

Readers are advised that a few extra copies of the August issue of FOOD MANUFACTURE are available.

To avoid disappointment, application for these should be made as early as possible.

Cellulose Plastics for Modern Packaging

BRITISH manufacturers interested in the use of cellulose plastics for packaging purposes hitherto have used cellulose acetate, but it is probable that ethyl cellulose soon will be preferred for certain specialised applications requiring a high resistance to moisture, high resistance to discoloration due to exposure to sunlight, and superior dimensional stability.

During the latter years of the war, ethyl cellulose was used for the protection of engineering components during transit from America, the plastic serving as a complete corrosion preventative while having the advantage that it can be removed from the part by peeling. For this type of protective covering, the ethyl cellulose is applied by dipping the metal in a concentrated solution or by spraying the dry ethyl cellulose with the Schori pistol.

The properties of the two cellulose plastics are:

Cellulose Acetate

1. The material is economical in use.
2. High degree of visibility is a characteristic of transparent films.
3. The films possess good mechanical strength.
4. Reasonably good protection against moisture is afforded to packed goods.
5. The film can be hot-sealed or cemented, and provided box-making machinery is specially adapted there is no reason why it should not be used for making acetate boxes.
6. Acetate is available in powder form for injection or compression moulding, and it is suggested that greater use is likely to be made of acetate mouldings for closures and bottle caps where phenolics are unsuitable.

Ethyl Cellulose

1. The ether is more expensive than the ester, but against the additional cost must be set the lower density of the materials which, although not considerable, needs to be taken into consideration.
2. Ethyl cellulose is available in sheets, 54 in. by 24 in.; thicknesses from 5/1,000 in. upwards. The transparent grades have a high degree of visibility.
3. Ethyl cellulose has a lower moisture absorption figure than the acetate, the figures for a British material being 1·25 per cent. in 48 hours against 1·3-1·5 per cent. for acetate in 24 hours.
4. Ethyl cellulose requires a smaller proportion of plasticiser than the ester, and this fact alone is of appreciable importance as influencing dimensional stability, which is largely determined by seepage of plasticiser as an aftermath of moisture absorption and also loss of volatile plasticiser through the action of heat.
5. This cellulose plastic enjoys better resistance to discoloration than the acetate and for special applications, such as packs required for export to tropical countries, this should be an advantage.
6. Ethyl cellulose is available in powder form for moulding by means of injection or compression presses. Moulding qualities are excellent.

For the manufacturer of most types of containers

cellulose acetate meets all normal requirements. The ether is suggested for special packaging applications, *e.g.*, certain articles of food or expensive drugs. Ethyl cellulose possesses good electrical properties, and the loss factor of this material at 1,000 cycles under conditions of humidity is considerably lower than cellulose acetate.

In view of the success achieved in the prevention of corrosion by the use of films of ethyl cellulose, it is likely that engineering firms engaged in export trade may find this plastic of great service, and food manufacturers make use of it.

Moisture in Meat Extract

A SECOND paper by A. R. Riddle on this subject provides the details of a rapid and sufficiently accurate hydrometer method well suited to works use (*Journal of the Council for Scientific and Industrial Research, Australia*, Vol. 18, 1945, pp. 153-159).

Meat extract is usually derived from the "soup" which results from the cooking of meat subsequently used for canning. This "soup" is concentrated by evaporation in either vacuum or open-type evaporators until the operator judges the extract to be of the desired moisture content, when further evaporation is stopped, samples are taken for laboratory determinations of moisture, and if the moisture content is satisfactory the completed extract is "drawn" and packed. On receipt of the laboratory figure for moisture content, the operator decides whether or not the extract to which it refers has to be returned to the evaporator for adjustment of its moisture content. The difficulty of knowing when to "finish off" an extract for a specific moisture content is very real. Errors of judgment may give rise to considerable loss. In extreme cases the extract has had to be re-treated four times.

The eye estimation of water content is bound to be affected by the nature of the material to be cooked, since the composition of the extract markedly affects consistency at a given water content. A much "stiffer" and more gelatinous extract results, for a given water content, if the "soup" is derived from hearts, skirt, bone, sinews, etc., as well as the muscle tissue, than if the "soup" is derived from boned-out muscle tissue only. "Soup" of equal consistency might have water contents varying between 20 and 30 per cent. The desirability of a method whereby the moisture content of an extract can be determined within 1 per cent. in a few minutes will be apparent.

The general principle of estimating moisture content by determination of density is not new, but the techniques hitherto used have not given satisfactory results. The new method consists of drawing a curve connecting densities of a standard *dilution* of a number of samples of extract taken at various stages of evaporation with the corresponding percentages of moisture in the undiluted extract (as determined by a standard method such as oven-drying or distillation with an immiscible liquid).

This curve is used in practice to determine the moisture level of an extract at any stage of evaporation by making a hydrometer determination of density of a dilution of 25 g. of extract in 250 g. of water, the hydrometer reading being taken at or corrected to the standard temperature of 20° C. The working range lies roughly between 30 and 15 per cent. of water in the extract, so that a fairly open scale must be used for the main curve. For variations of moisture content between 33·4 and 15 per cent. the density of the diluted extract varies between 1·0320 and 1·0410 at 20° C. It is desirable that the hydrometer should have as long a scale on its stem as possible and that the scale should cover no more than the range 1·0325 to 1·0425. It may be graduated to indicate density in grams per millilitre at 20° C. in accordance with standard practice—B.S.S. No. 718 (1936).

In practice the diluted extract will often not be at the temperature for which the hydrometer is calibrated and for which the main curve is drawn; this may lead to serious inaccuracy. A temperature-density correction curve therefore needs to be established and used. The making and use of this curve are described in the original.

The density-moisture content curve for beef is not strictly applicable to extracts prepared from mutton or mixtures of mutton and beef. It is requisite to prepare separate curves for each main type of material likely to be processed, and it is also necessary that the operator should be aware of the type of material from which the extract is derived. Obviously the density method will act best if all procedures are standardised. The time during which a sample is exposed to air before being tested may also affect results, whatever method of moisture determination is used, since changes in water content of extracts can occur very rapidly.

"The density method is only as good as that by which it is calibrated. In the absence of a universally accepted and standardised method for the determination of moisture content in meat extract, as suggested by Riddle (*Australian J. Counc. Sci. Indust. Res.*, Vol. 17, 1944, pp. 291-298), any quick method will, for the present, have to be calibrated with the method employed by the individual manufacturer. Since such methods may show overall variations of up to 3 per cent. in extreme cases between two determinations on one sample, it is desirable to replicate at least three times and use the arithmetic mean of the values obtained. This laboratory* intends to publish shortly details of a drying oven and drying-oven technique which give greatly improved results with very little spread between replicates."

It is stressed that the rapid method of moisture determination by use of a hydrometer in a dilution of the extract should not necessarily be regarded as one to replace the oven-drying determinations on the completed extract. The function of the new rapid method is purely to determine quickly the end-point at which the extract is to be finished off.

The two curves (main density curve and temperature-correction curve) are not reproduced from the original paper. It is pointed out that the specimen curves there given should not be used in industrial practice. They were obtained with data obtained in a particular process of making extract and would probably not exactly fit the conditions existing in another plant. Each manufacturer should construct his own set or sets of curves to suit his own conditions and types of material.

* The Brisbane Laboratory of the Division of Food Preservation and Transport.

Sterilising Processed Cream

BORN of six years of research and development work, a new sterilising method of preparing fluid food products is being used in producing processed table and whipping cream. When prepared under the new method developed by the California Milk Products Co., Gustine, Calif., this processed cream can be kept for longer than a year at room temperatures, and still retain its original qualities of freshness, non-coagulation, and flavour. When production for civilian consumption can be resumed the company expects to license other suitable processors to use the new method.

Prior to processing, a small amount of vegetable stabiliser, one-fourth of 1 per cent. or less by weight, is added to sweet, fresh cream. The function of the stabiliser, one widely used in ice cream, is to keep the milk solids in the finished product from separating on long storage.

The mixture is preheated and sterilised at temperatures varying between 260° and 280° F., then cooled rapidly and passed into sterile holding tanks. From the holding tanks it is piped to the bottling-room as needed.

The entire cycle from separation-room to storage tanks above the bottling-room takes about 4 minutes. In a standard pasteurisation process, a cycle of about 30 minutes is required. Flash pasteurisation requires that the milk be processed at a temperature of 180° F. for 1 minute during a 5-minute cycle from separation to storage vats.

Among the most critical operations in the entire process is bottling and capping. In the bottling-room, germ-killing ultraviolet radiations of Westinghouse Sterilamps guard against airborne bacteria. Operators wear clean, sterilised white uniforms, gloves, and masks. Bottles and caps are sterilised by steam at 275° F. for half an hour in a large retort, then are placed on the conveyor belt which takes them through a standard bottle-filling machine, through the capper, and out to the labelling and case-filling operations. Sterilamps protect the bottles and caps from the moment they leave the steriliser.

Air which enters the bottling-room is scientifically cleaned and conditioned. Atmospheric air is drawn through a bank of mechanical filters, water washers, and a Westinghouse Precipitron. This device removes particles of dirt as small as

The bacteria-killing ultraviolet lamp stands guard on the ceiling of the change room through which workers must pass before going on shift in the air-conditioned bottling room at the Gustine, Calif., plant of the California Milk Products Company. The picture shows an operator preparing to enter the bottling room where " Avoset " is bottled.

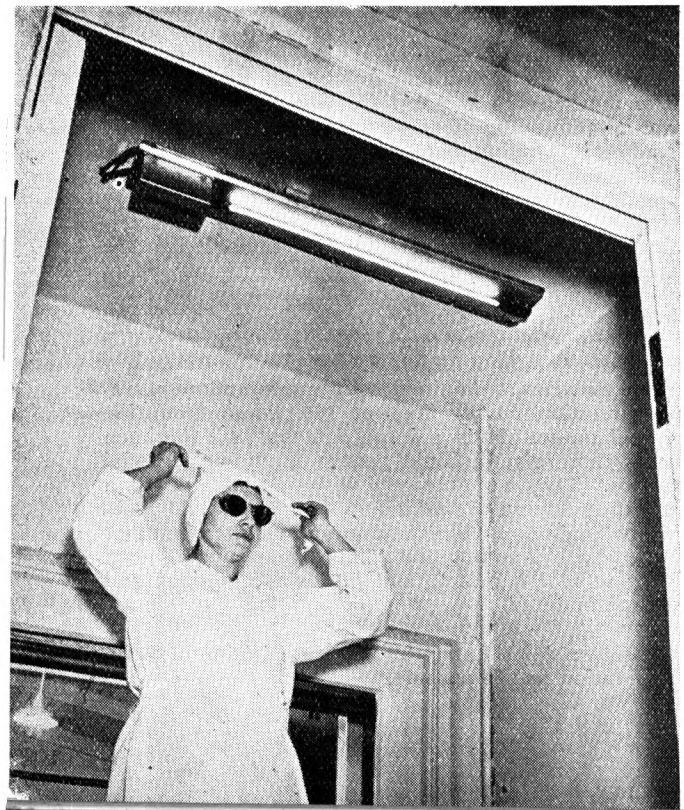

On this laboratory equipment, bottles of " Avoset " picked at random from production are agitated for five days. Simulated churning action undergone by the processed cream in this " transportation " test reveals any tendency to turn to butter. If such a tendency is noted, the entire day's run from which a given sample bottle was taken is rejected.

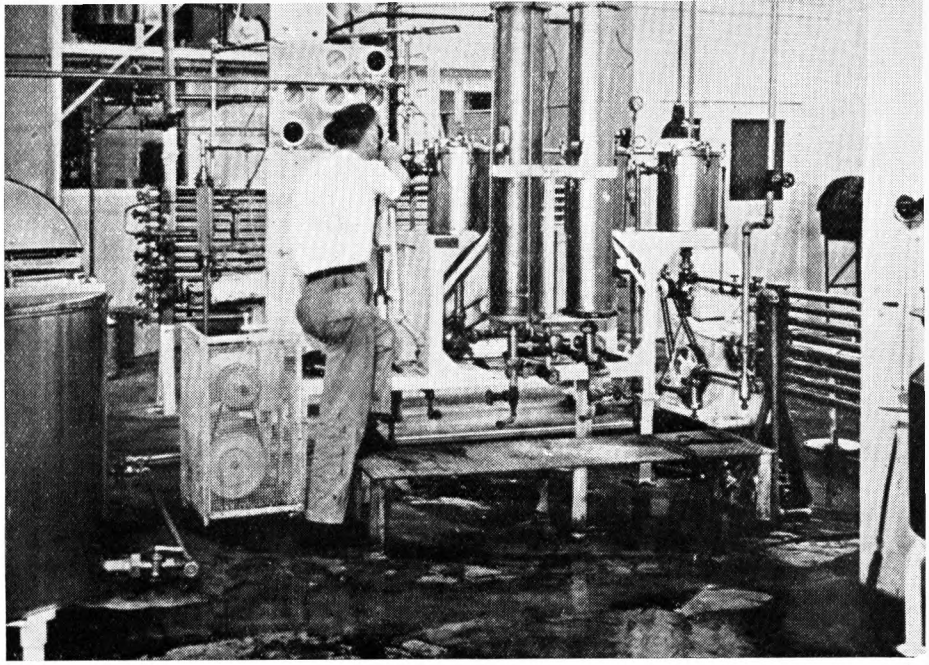

An operator checks steam temperature and pressure during the manufacture of processed cream by the new sterilising method. Cream from the separating room flows through kettles (centre rear), where it is exposed to high-temperature steam under high pressure, thence passing through cooling coils (extreme right and left) and into storage tanks (upper left). The cycle from separating room to storage tanks requires about four minutes. From the storage tanks the pure processed cream goes into the bottling room.

1/250,000 of an inch by electrostatic means. The cleaned, washed air is brought to the desired temperature and humidity, then passed to the bottling-room. Sterilamps in the air duct provide a further precaution against bacterial contamination.

After bottling and capping, each day's production is stored for six days while extensive laboratory tests are made on random selected samples. In the laboratory some of the bottles are incubated at 100° F. to speed up possible bacterial action, then are tested. Other test bottles undergo a transportation examination. They are placed in little carts which are rolled over cams mounted on a circular steel track. This test runs continuously for five days. At the end of that time the cream is inspected for churning action. Should the product be either chemically or physically unstable it is rejected as it might turn to butter during shipment.

The laboratory also checks the fat globule content to be certain that the processed cream is up to the required standard. This averages 18 per cent. for table grade, and 30 per cent. for whipping grade cream, under present regulations of the U.S.A. War Food Administration.

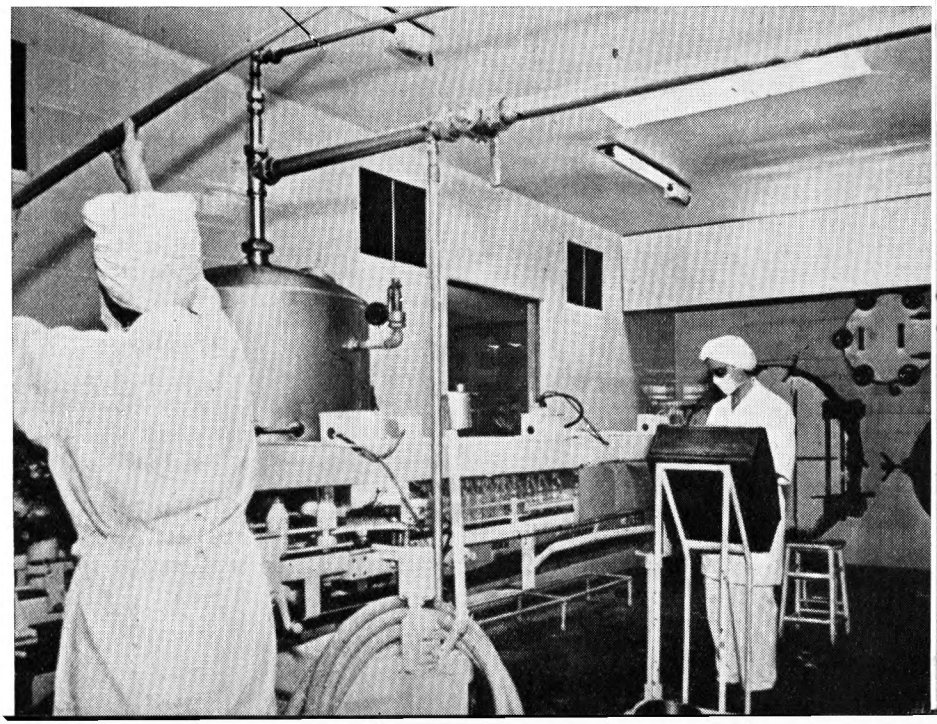

Electrically cleaned air and ultra-violet rays protect the purity of the processed cream in the bottling room. Air coming into this room at 3,000 cubic feet per minute passes through several washes, then through a Westinghouse Precipitron. This electric air cleaner removes foreign particles as small as 1-250,000th inch in diameter. Westinghouse Sterilamps stand guard over bottles passing along the hooded conveyor, centre, and around the bottling machine, left, to guard against the possibility of product contamination by airborne bacteria or mould spores during bottling and capping operations. The operator at the extreme right is removing bottles and caps from a retort.

Ministry of Food

Latest Statutory Rules and Orders

The list given below is the continuation of the list of Orders published in *Food Manufacture*, November 1, 1945, page 396.

No.	Date. 1945.	
		PRICE FIXATION ORDERS
353	Mar. 27.	Order amending the Fish (Maximum Prices) (No. 2) Order, 1944.
368	,, 30.	Order amending the Canned Fish (Maximum Prices) Order, 1943.
369	,, 31.	Sales (Charges) (Amendment) Order. (Emergency Powers (Defence) Act, 1939. S.2.)
410	Apr. 19.	Milk (Control and Maximum Prices) (Great Britain) Order. Revokes S.R. & O. 1940 Nos. 1393 and 2029; 1941 Nos. 381, 1380, 1766, and 1936; 1942 Nos. 7, 607, 1785, 1804, 2061, 2285, and 2286; 1943 Nos. 184, 185, 233, 298, 432, 509, 705, 806, 1009, 1199, and 1587; 1944 Nos. 493, 829, and 1209.
411	,, 19.	Milk (Control and Maximum Prices) (Northern Ireland) Order. Revokes S.R. & O. 1940 No. 1897; 1942 No. 2349 and in respect of Northern Ireland, 1941 No. 381; 1942 No. 7; 1943 No. 298.
413/S12	18.	Milk Marketing (Special Areas) (Scotland) (Charges) (Amendment) Order. (Emergency Powers (Defence) Act, 1939. S.2.)
418	,, 21.	Order amending the Rabbits and Hares (Control and Maximum Prices) Order, 1944.
428	,, 23.	Home Grown Tomatoes (Control and Maximum Prices) Order.
430	,, 23.	Order amending the Dredge Corn (Control and Prices) (Great Britain) Order, 1944, the Dredge Corn (Control and Prices) (Northern Ireland) Order, 1944, the Wheat (Control and Prices) (Great Britain) Order, 1944, and the Wheat (Control and Prices) (Northern Ireland) Order, 1944.
		COFFEE
389	Apr. 12.	(Liquid Coffee Essences) Order. (1943 No. 1553.)
		EGGS
627	May 29.	Dried Egg (Control of Use) Order.
		FEEDING STUFFS
577	May 18.	Directions supplementary to the Feeding Stuffs (Rationing) Order, 1943. (1939 No. 927. Reg. 55.) Revokes S.R. & O. 1943 Nos. 1499 and 1691; 1944 Nos. 47, 1041, and 1339.
725	June 15.	Order amending the Feeding Stuffs (Regulation of Manufacture) Order, 1944.
		FISH
525	May 8.	General Licence under the Fish (Supplies to Catering Establishments) Order, 1943.
		FRUIT
417	Apr. 21.	Cherries Order. Revokes S.R. & O. 1944 Nos. 559 and 665.
429	,, 23.	The Soft Fruit Order.
460	,, 27.	Canned Fruit and Vegetables Order. Revokes S.R. & O. 1944 Nos. 135, 798, and 1297; 1945 Nos. 196 and 284 (as regards Canned Fruit and Vegetables only).
		LABELLING
464	Apr. 27.	Order amending the Labelling of Food (No. 2) Order, 1944, and granting a General Licence thereunder (1943 No. 1553).
		MILK
402	Apr. 17.	Directions supplementary to the Milk (Control of Supplies) Order, 1942, and the Milk (Control of Supplies) (Scotland) Order, 1942. Revokes S.R. & O. 1945 No. 278.
409/S11	17.	Order amending the Milk Marketing (Special Areas) (Scotland) Order, 1942.
		POINTS RATIONING
355	Mar. 28.	Order amending the Food (Points Rationing) Order, 1944.
436	Apr. 24.	Order amending the Food (Points Rationing) Order, 1944.
582	May 22.	Order amending the Food (Points Rationing) Order, 1944. (1939 No. 927. Reg. 55.)
		POTATOES
391	Apr. 12.	New Potatoes (1945 Crop) Order.
415	,, 20.	Order amending the Potatoes (1944 Crop) (No. 2) Order, 1944.
471	May 1.	Order amending the Potatoes (1944 Crop) (No. 2) Order, 1944.
580	,, 22.	Order amending the Potatoes (1944 Crop) (No. 2) Order, 1944. (1939 No. 927. Reg. 55.)
716	June 13.	Order amending the New Potatoes (1945 Crop) Order, 1945.
		VEGETABLES
667	June 5.	Carrots (1945 Crop) (No. 1) Order.

The Antioxidant Properties of the Vegetable Phosphatides

In this article the antioxidant properties of the commercial vegetable phosphatides and their mode of action are discussed, and the literature is reviewed.

C. L. BIBBY, B.A., B Sc., A.R.I.C.

COMMERCIAL "lecithin" contains about 30 per cent. of triglyceride oils, fatty acids, and other acetone soluble bodies, about 20 per cent. of lecithin, about 40 per cent. of kephalin, a phosphatide similar to lecithin in many of its properties but insoluble in alcohol, and some 10 per cent. of carbohydrates, moisture, and other non-fatty bodies. The antioxidant properties of the phosphatides can be traced to the alcohol-insoluble kephalin fraction which is present, acting "synergistically" with other constituents of either the commercial "lecithin" or the fatty substrate or both.

Though most of the published work concerns the soya phosphatides, there is evidence that phosphatides derived from other sources—*e.g.*, groundnuts—possess antioxidant properties in an equal degree.

The whole question of fat stability assumes particular importance at the present moment when fats are in short supply and of doubtful quality. The following notes are intended to throw a little light on the role which may be played by the commercial vegetable phosphatides in delaying rancidity in fats of animal and vegetable origin. These antioxidants are particularly attractive for the purpose, as they are natural products and are absolutely safe and non-toxic in use.

Early Work on the Soya Phosphatides

Bollman[1] discovered that the addition of a small percentage of soya "lecithin" to refined glyceride fats imparted to the latter a greater stability and higher resistance to oxidation. This property of the soya phosphatides is now well known, and is of importance in the edible fat and margarine industries. There have been many publications confirming and enlarging upon this observation. For example, Kochenderfer and Smith[2] investigated the influence of small quantities of commercial soya bean "lecithin" on the oxidation of lard, as measured both by direct oxygen absorption and by the oven test, and reported a considerable increase in stability in both cases. Sollman[3], using an oxygen absorption apparatus, found that the addition of "lecithin" to cottonseed oil inhibited oxidation even in the presence of an accelerator in the form of cobaltic oleate, and also claimed that exposure of the "lecithin" to oxygen for half an hour at 65° C. destroyed its antioxidant properties. Similar results were obtained by Royce[4], who, using a colorimetric method depending on the reduction of methylene blue and comparing these results with orthodox accelerated oxygen absorption tests, found that the antioxygenic index of "lecithin" in refined cottonseed oil at a concentration of 0·2 per cent. was between 2 and 3. The antioxygenic index is defined as the induction period of the fat containing the antioxidant divided by the induction period of the fat alone.

Evans[5] found commercial soya "lecithin" to be an excellent antioxidant for vegetable oils, cottonseed oil in particular, in which oxidation was accelerated by the presence of a little cobaltic oleate peroxide. The oils were stored in the absence of light at temperatures of between 25° C. and 28° C., and the course of the oxidation was followed by peroxide value determination. Between 0·05 and 0·1 per cent. of soya "lecithin" was found to be effective. Nakamura and Tomita[6] found the mixed soya bean phosphatides, and also their lecithin and kephalin fractions, to be weak antioxidants for soya bean oil.

The Importance of Kephalin as an Antioxidant

A more thorough examination of the antioxygenic properties of the soya phosphatides was undertaken by Olcott and Mattill[7]. In the first place they made the significant observation that the phosphatides were effective in different degrees in different kinds of fat, being much more effective in cottonseed oil than in lard, for example. Secondly, the "purification" of the phosphatides by fractionation with acetone, in which they are insoluble, has no influence on their antioxygenic properties, which remain in the acetone-insoluble portion.

Pure lecithin was prepared by means of the cadmium chloride separation, according to the method of Levene and Rolf[8], and was found to be inactive, but kephalin, prepared from the mixed phosphatides by repeated precipitation by alcohol from ether solution, was found to be antioxygenic towards refined cottonseed oil. The authors therefore attributed the antioxygenic properties of commercial soya "lecithin" to its alcohol-insoluble kephalin fraction. Experiments with ethanolamine,

then thought to be the characteristic base of kephalin, seemed to prove that the properties of kephalin were due to the molecule as a whole, and not to any portion of same. In concluding, Olcott and Mattill draw attention to the fact that kephalin behaves as a monobasic acid, whereas lecithin is neutral.

All the above experimental work is based on accelerated oxidation tests of various kinds, the details of which need not concern us here, and though it is undoubtedly reliable so far as it goes, it must be emphasised that the course of oxidation at elevated temperatures, or under the influence of a catalyst, is not necessarily identical with that which may be followed at room temperatures. Accelerated stability tests for edible fats, though useful as a guide, do not always reflect accurately their behaviour under normal conditions of storage. However, it can be stated confidently that the soya bean phosphatides are effective as anti-oxidants under all normal conditions of storage, and the United States specification for shortenings permits the addition of "lecithin" as an inhibitor against rancidity.

Before proceeding to consider the mode of action of the soya bean phosphatides as antioxidants, it must be remembered that the observations recorded above were all carried out using natural fatty oils as substrates. Natural edible fats and oils invariably contain traces of foreign unsaponifiable substances, and the possibility that the phosphatides, or rather the kephalin, is reacting in conjunction with other substances cannot be overlooked. The question can only be settled finally by examining the behaviour of the phosphatides in the distilled methyl esters of the fatty acids, whose purity can be guaranteed. Olcott and Mattill[9] found that purified kephalin was almost completely inactive when added to the distilled methyl esters of hydrogenated cottonseed oil, but that, in common with a large number of other acidic antioxidants, it showed a pronounced synergistic effect when used together with certain "inhibitol" concentrates obtained from wheat germ and cottonseed oil, and now known to contain tocopherol. Hilditch and Paul[10] confirmed that the purified mixed phosphatides from the soya bean have no antioxygenic properties towards distilled olive oil esters.

The phenomenon of synergism is now well known to fat chemists, though its mechanism has not yet been fully elucidated. When the stabilising effect of two antioxidants used together is greater than the sum of their effects when added individually they are said to act synergistically. In view of their behaviour with distilled fatty esters, it must be concluded that the phosphatides of themselves have no direct antioxidant properties, but that, when added to vegetable fats, they act synergistically with the traces of natural "inhibitols" known to be present and so behave as antioxidants. Their lesser activity towards lard and animal fats in general may be explained by the fact that the natural "inhibitols" occur in a very much smaller degree or are completely absent in the more common animal fats.

"Synergism" between Tocopherols and Phosphatides

Using carefully purified materials and a substrate consisting of the distilled methyl esters of cottonseed oil, Swift, Rose, and Jamieson,[11] in an investigation on the antioxidant properties of α-tocopherol, were able to demonstrate the synergism which occurs between the tocopherol and the kephalin fraction of the crude phosphatides (in this case derived from cottonseed). The enhancing effect of 0·025 per cent. of the kephalin fraction increased the antioxygenic potency of 0·1 per cent. of α-tocopherol approximately three times, whilst the addition of 2·5 parts per million also had a very marked effect. The effect of tocopherol and commercial soya "lecithin" upon the stability of several samples of lard was studied by Reimenschneider *et al.*,[12] using accelerated tests and measuring oxygen absorption. Both were shown to have some antioxygenic effect when used separately, but the synergism reported earlier was fully confirmed, and when both substances were used together in conjunction with one another a considerable increase in stability was observed.

The synergism between kephalin and the tocopherols probably forms the basis of a claim[13, 14] that oleo fats and shortenings can be stabilised by the addition of between 1 and 10 per cent. of refined hydrogenated soya oil, which contains small quantities of tocopherols or similar compounds, together with between 0·05 and 0·2 per cent. of commercial "lecithin."

The crude soya bean phosphatides themselves contain about 0·2 per cent. of tocopherols,[15] but this percentage, though important in other directions, is too small to have a controlling influence on their antioxidant properties. It may, however, account for the observed slight activity of the commercial phosphatides in certain animal fats which are devoid of tocopherols. The tocopherol content of crude commercial groundnut "lecithin" has been shown to be 0·025 per cent.[16] It is worth while noting that almost the whole of the tocopherol is removed by "purifying" the phosphatides by treatment with acetone, a process now commonly used in the commercial production of higher grade phosphatide materials.

The Mechanism of "Synergism"

Golumbic[17] has investigated still further the synergism between the tocopherols and phosphoric acid, the latter being typical of a number of acidic compounds which have little or no stabilising properties in themselves, but which will behave as antioxidant in the presence of tocopherols. In a

tocopherol-phosphoric acid-lard ester system, he was able to demonstrate that during the process of rancidification the phosphoric acid retards the oxidation of the tocopherol and so maintains the activity of its phenolic radicle. Further, he showed that α-tocoquinone and phosphoric acid, both ineffective by themselves, nevertheless powerfully stabilised a fatty substrate when they were used together, an observation which could be explained only by assuming that the phosphoric acid had in some way regenerated a tocopherol from the tocoquinone; that a regenerated tocopherol was present was confirmed by biological assay. It seems possible that kephalin behaves in a similar way, at any rate in retarding the oxidation of tocopherols and other naturally occurring "inhibitols," but the subject has not yet been fully investigated.

The Effect of Deodorising Fats in the Presence of Phosphatides

Some publicity has been given to statements that the antioxidant properties of the vegetable phosphatides are destroyed by heating to temperatures about 65° C. This contention receives no support from Olcott,[18] and has always seemed unlikely to the author, firstly because the phosphatides are heated to higher temperatures during the process of their manufacture, and secondly because the antioxidant properties have often been measured by accelerated tests which involve the use of high temperatures. The matter now seems to have been finally resolved by Bailey and Feuge,[19] who confirm an earlier indication[14] that the soya bean phosphatides are equally, and sometimes more, effective when added before deodorising vegetable oils, a process requiring prolonged heating at 200° C. The phosphatides are almost certainly decomposed at these temperatures, but their decomposition products still seem to maintain their activity. For shortening and frying fats there is some advantage to be gained by adding the phosphatides before deodorising, in that the risk of introducing flavours into the edible product is considerably reduced. In margarine, on the other hand, it is important that the phosphatide molecule should be present in its entirety on account of its emulsifying properties, and the above procedure cannot be recommended. Bailey and Feuge examined the tocopherol content of the oil before and after deodorising in the presence of the phosphatides, but could find no evidence of tocopherol regeneration during the process.

Groundnut and Cottonseed Phosphatides

Thurman[20] claims that the phosphatides derived from the oils which do not contain linolenic acid (cottonseed and corn oil are cited) have superior antioxidant properties and increased stability. These claims can probably be substantiated, but, although cottonseed and corn phosphatides are now available on a commercial scale in the U.S.A., their production does not match that of the soya bean phosphatides, though the cottonseed product may be a serious competitor in the future. Groundnut phosphatides, manufactured commercially in Great Britain, are available in quantity, and a series of experiments has recently been completed in the author's laboratory with the object of examining the effect of the addition of groundnut phosphatides, both before and after "purification" by acetone treatment, on the oxidation and flavour reversion of deodorised cooking fat and margarine bases containing a preponderance of vegetable fats. Storing the fats for a long period at room temperature and assessing the deterioration both organoleptically and by measurement of peroxide values, a considerable degree of protection was found to be afforded, an average protection index of 2 being observed. These results indicate that the addition of between 0·1 and 0·2 per cent. of commercial groundnut "lecithin" will impart a stability to edible fats in the same way and under the same conditions as the commercial soya bean phosphatides.

It has been stated that the phosphatides will also stabilise vitamin A concentrates.[20, 21] The experiments described above also showed that the incorporation of a small proportion of groundnut phosphatides in a margarine mix caused the vitamin A potency, measured spectroscopically by the Carr-Price test, to be maintained for a considerably longer period than in a control sample to which no phosphatides had been added.

In addition to the published work on the antioxidant properties on the phosphatides themselves, a large number of claims have been made for various derivatives of the phosphatides, including halogenated phosphatides, and also for mixtures of phosphatides with a wide range of other compounds. Space, however, does not permit us to consider these fully now, and the author is aware of none which has found application on a commercial scale.

REFERENCES

1. H. Bollmann, *U.S. Patent* 1,575,529 (1926); *Brit. Patent* 260,108 (1926).
2. E. W. Kochenderfer and H. G. Smith, *Proc. Iowa Acad. Sci.*, **39**, p. 169 (1932).
3. E. I. Sollman, *Am. J. Physiol.*, **97**, p. 562 (1931).
4. H. D. Royce, *Soap*, 7 (9), 25, 38 (1931).
5. E. I. Evans, *Ind. Eng. Chem.*, **27**, p. 329 (1935).
6. M. Nakamura and S. Tomita, *J. Soc. Chem. Ind. Japan*, **43**, p. 245 (1940).
7. H. S. Olcott and H. A. Mattill, *Oil and Soap*, **13**, p. 98 (1936).
8. P. A. Levene and I. P. Rolf, *J. Biol. Chem.*, **72**, p. 587 (1927).
9. H. S. Olcott and H. A. Mattill, *J.A.C.S.*, **58**, p. 2204 (1936).
10. T. P. Hilditch and S. Paul, *J. Soc. Chem. Ind.*, **58**, p. 21 (1939).
11. C. E. Swift, W. G. Rose, and G. S. Jamieson, *Oil and Soap*, **19**, p. 176 (1942).

(*Continued on page* 448)

A New

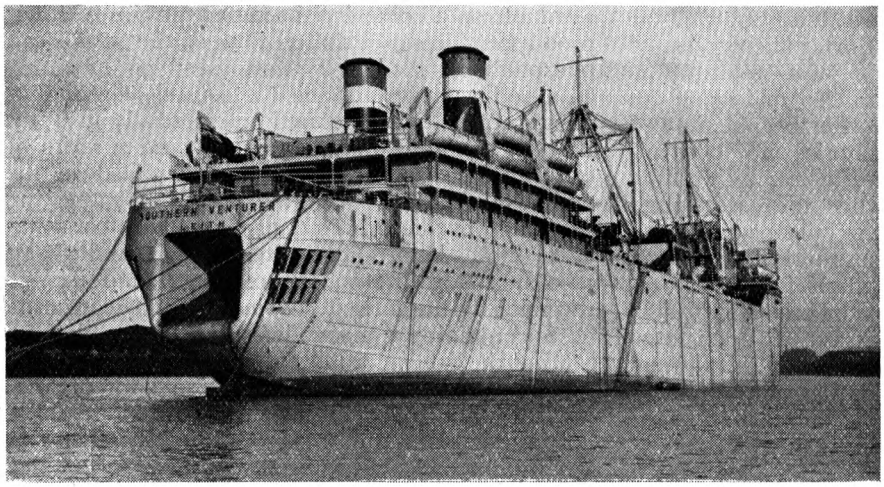

The " Southern Venturer " in midstream ready to depart on her whaling expedition to the Antarctic.

ON a recent Sunday evening, her belly full of newly designed plant and equipment, the *Southern Venturer*, biggest ship yet to be built on the Tees, slipped out of port at Tyneside to lead this season's British whaling expedition to the Antarctic. Within her 573 feet length and 74 feet width is a modern whaling factory, complete with boilers, conveyor belts, generators, and machinery weighing over 1,600 tons.

Two other British whaling ships, the *Empire Victory* and the *Empire Venturer*, will join her for the season at the South Georgia whaling base, and three Norwegian vessels will also take part. Ten small harpoon boats will use the *Southern Venturer* as parent ship.

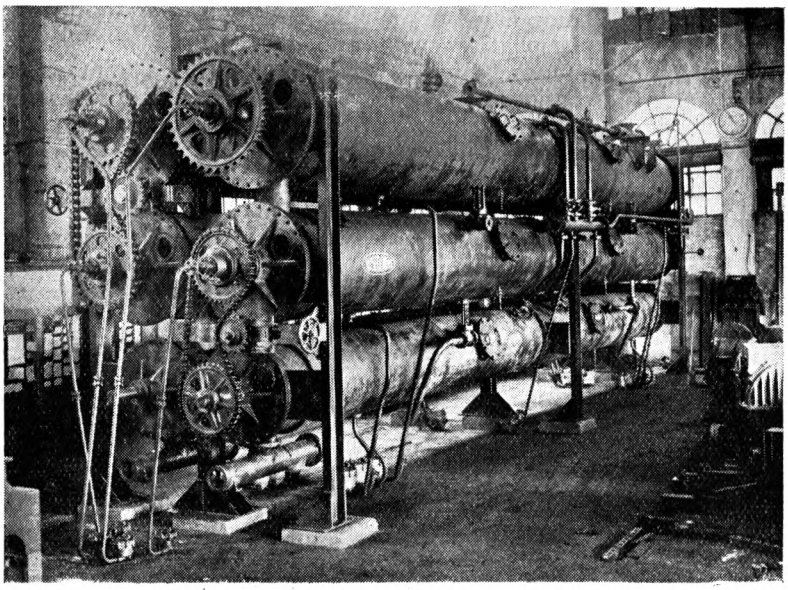

Drying unit erected in factory prior to installation in the ship.—*Courtesy of Rose, Downs and Thompson, Ltd.*

Whale Meat

One of the outstanding features of the equipment in this floating factory is the new plant installed for the large-scale processing of whale meat and liver. Hitherto, whale meat has been largely wasted, the factory concentrating on the treatment of the whale blubber for the recovery of the oil. This oil has a vitamin value exceeding even that of halibut liver oil, but the difficulties of recovering it and retaining its vitamin value aboard ship have been so great that the task has not been attempted before. Both these problems have been successfully overcome, and the meat is to be dehydrated and the liver oil extracted on board the *Southern Venturer*.

In dealing with whale meat the first problem was that, despite its excellent food value, its high oil content makes it too rich for human consumption, and while moisture can be removed by dehydration, oil cannot be. Further, as it was desired to treat 600 tons of meat per 24 hours, the steam required to remove the excess moisture by ordinary methods of dehydration would be so enormous as to rule it out as a proposition on board ship.

The solution of these problems is a triumph of the Hull engineering industry, whose eleven years of research work, starting with a trip by Mr. R. A. Bellwood, the late technical director of Rose, Downs and Thompson, Ltd., has been crowned with the production of a plant, the first of its particular kind in the country. By

(*Continued on page* 455)

Whale Factory Ship

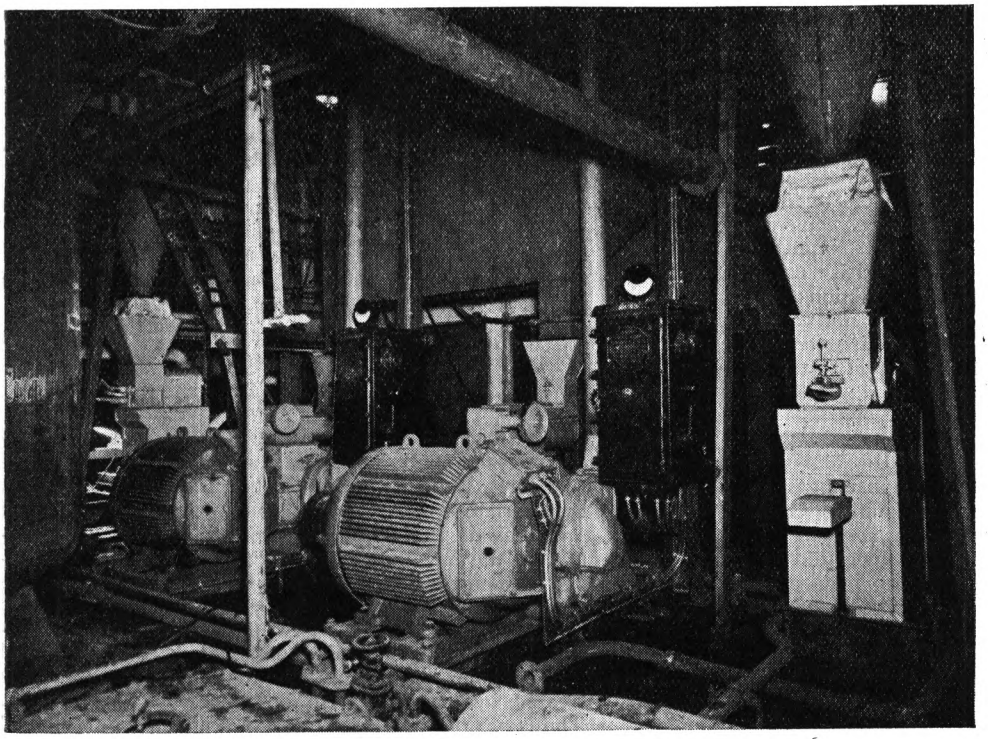

Meal grinding and bagging plant, showing the driving motors in the foreground. —*Courtesy of Rose, Downs and Thompson, Ltd.*

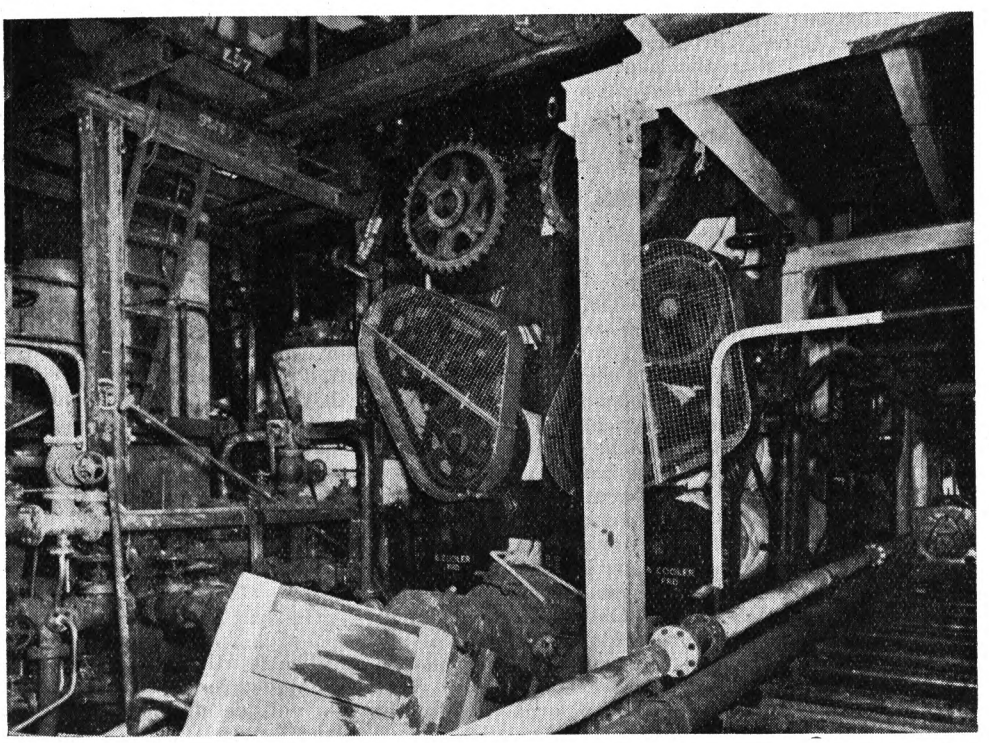

The liver dryers, showing (behind the ladder) the elevator lifting extracted liver meal to meal drying tube. In the right-hand corner can be seen a portion of the bagged meal conveyor.—*Courtesy of Rose, Downs and Thompson, Ltd.*

Reports on British Food Research

FRUIT AND VEGETABLES

In his introduction to the annual report for 1944 of the Fruit and Vegetable Preservation Research Station, Campden, Mr. F. Hirst, M.Sc., A.R.C.Sc., the Director, calls attention to the fact that during the past five years the activities of the Research Station have been largely determined by war-time conditions, and the scientific work necessarily directed to the investigation of short-term practical problems connected with the preservation of food under such conditions. The improvement of the quality of British canned fruit and vegetables is one of the chief functions of the Research Station, and with the return to normal conditions the control of quality and the establishment of new official standards may have to be undertaken. The National Mark standards used before the war were worked out at, and the control of quality operated from, the Research Station.

The work carried out for the Ministry of Food in connexion with the maintenance of standards under the Fruit and Vegetable Canning Orders was continued for the fifth year in succession.

Among the research work undertaken in the laboratories was the correlation of hydrogen swells with thickness of tin coating. Experiments on the use of electro-tin plate and on the effect of corrosion inhibitors in the lining compound were also completed. Other matters studied were corrosion of tinplate, vacuum in cans, quality control, analytical methods, and disposal of cannery effluents.

An article on the vitamin C content of canned potatoes and canned peas is contributed by Mr. W. B. Adam. Another interesting paper is "The Internal Corrosion of Cans" (Progress Report II), by Dennis Dickinson, and still another paper by Mr. W. B. Adam treats of "Corrosion and Hydrogen Swells in Canned Vegetables." The determination of tin in canned foods is discussed by Mr. Dickinson.

DAIRY PRODUCTS

The National Institute for Research in Dairying has issued a report for the years 1941, 1942, 1943.

It is divided into two sections: (1) general, and (2) reports by departments. The Dairy Husbandry Department records valuable experimental work with dairy cattle.

The work of the Chemical Department has among other matters been concerned with the compositional quality of milk and other analytical work; the physico-chemical, physical, and colloidal properties of milk and dairy products; and cheese investigations.

The Bacteriological Department has studied lactic acid bacteria, mastitis, cheese-making starters and bacteriophage, H.T.S.T. pasteurisation, and a number of other subjects. A new chapter in the history of the department was opened with the establishment in May, 1941, of a mobile laboratory. One of the main intentions of the scheme is to provide, at the call of advisory dairy bacteriologists, a well-equipped mobile laboratory with a specialist staff, ready to go at short notice to assist in the solution of any urgent field problem which requires a special attack of this kind.

During the three years under review, the most outstanding feature affecting the work of the Dairy Bacteriology Advisory Department has been the introduction in May, 1942, of the National Milk Testing and Advisory Scheme, following upon an experimental testing and control trial covering four representative counties in England and Wales, carried out during the winter and early spring of 1941-1942.

Nutritional studies and physiological work comprised the activities of the Physiology and Biochemistry Department. Among the nutritional studies figured the heat treatment and processing of milk; the nutritive value of cheese and fats; the chemical, physical, and microbiological estimation of vitamins in milk and other foodstuffs.

AGRICULTURE AND HORTICULTURE

The 1944 report of the Agricultural and Horticultural Research Station (the National Fruit and Cider Institute), Long Ashton, reflects a transitional stage in the work of the station. While work on the urgent problems of war-time food production is being maintained, the first steps are being taken towards a post-war expansion of the investigations on fruit.

Three articles by T. Swarbrick announce dramatic results in the utilisation of growth-promoting substances. The principal paper records the successful production of tomato fruits from unfertilised ovaries treated by spraying with beta-naphthoxy-acetic acid. The resulting seedless fruits are not inferior to normal tomatoes in appearance and quality. The method has had a practical application in ensuring the setting of the bottom trusses in commercial glasshouses. The spraying of apple fruits with naphthalene-acetic acid is shown to be an economic method of preventing pre-harvest drop, and in consequence producing a much better finished sample of the varieties Beauty of Bath and Worcester. Another application of growth-promoting substances is in improving the rooting of Yellow Pershore plum stocks.

The vitamin B status of fresh fruits is examined by D. P. James, and the vitamin C content of tomatoes by A. Pollard, M. Kieser, and J. Bryan. Outdoor tomatoes had more vitamin C than those grown under glass; the application of organic compost to the plants slightly lowered vitamin C content. In an investigation of the blackening of potatoes on boiling, A. Pollard, M. Kieser, A. Crang, and T. Wallace find that cooking quality depends on variety and site more than on manurial treatments. After a comparison of nine methods of preserving fruit and four of making fruit syrups, A. Crang, M. Croxall, D. P. James, and M. Sturdy report that sterilisation of fruit in bottles by slow heating in water gives generally the best results. A. Crang and M. Croxall also describe methods for the domestic production of unfermented apple juice.

CAKES AND BISCUITS

The fourth annual report of the Cake and Biscuit Manufacturers' War Time Alliance, Limited, reviews the considerable legislative activity in the biscuit and cake industries.

The intricate task of a periodic examination of the Returns of Fuel Consumption has been greatly helped by the co-operation received from members, and has resulted in a steady and increased reduction in fuel consumption due to the increased efficiency with which manufacturers have operated their fuel-consuming plant. The fuel efficiency work carried out by the Alliance and the method under which the Alliance Fuel Campaign is conducted was recently singled out by a Ministry of Fuel official as representing one of the best efforts made by any trade organisation, especially in view of the fact that the work has been maintained up to its original standard and even improved upon in the course of time.

With reference to the conference on post-war bread and flour, the Council of the Alliance considers that provided the recommendations or regulations which are finally decided upon only apply to bread, and flour for bread, and that manufacturers of biscuits and cakes are left free to use what suits them best, there will be no cause for complaint. The Council has, however, submitted a statement to the Conference setting out the requirements of the biscuit and cake manufacturers and the reason why complete freedom in the selection of flour by them is necessary for the welfare of their businesses.

PACKAGING MATERIALS

In the annual report of 1944-45 of the Printing and Allied Trades Research Association the use of wrapping materials and containers is described.

The experimental work at present in hand is to develop methods of testing packaging materials for water-vapour permeability. Two methods are being examined. The first is suitable for routine testing of all but the most impermeable films. Various forms of such a test have been available for some time, and the work of Patra has been directed towards the general acceptance of standard testing methods and conditions. The second method which has been developed is suitable for testing the more impermeable films.

The present experimental work provides an empirical approach to the subject and will enable packaging materials to be selected according to the degree of protection required. It is important, however, that the laws governing the transmission of water vapour through packaging materials should be established, and it is intended to extend the work to include a fundamental approach to the problem of water-vapour permeability.

In the measurement of relative humidity there is a need for a quick and accurate method of measuring relative humidity so that moisture conditions inside packages can be studied.

Various electric hygrometers have been described which meet most of these requirements, and experiments are being made to test one of these. In this, moisture in the air causes changes in the electrical conductivity of a thin film of synthetic resin in which is dispersed a small quantity of lithium chloride. By measuring the electrical conductivity the relative humidity can be determined.

Among other matters discussed is the task of adhesives, which is of major importance in many packaging operations. Tack and viscosity have been studied in a new type of viscometer, for which the term " penetroviscometer " is suggested.

The Forest Products Research Laboratory of the Department of Scientific and Industrial Research has been commissioned by the association to prepare a report on the methods of testing fibreboard and corrugated board containers for strength with special reference to their performance in practice.

VITAMIN STUDIES

A brief account of the results obtained in the Ovaltine Research Laboratories is given in their annual report for 1944. Further work has been done on those substances which are closely related chemically to vitamin C, from which they cannot be distinguished by ordinary and analytical methods, but do not possess the antiscorbutic properties of the true vitamin. These have been provisionally named " apparent vitamin C." The different methods which have been devised, all based on the original observation of Lugg that under certain conditions formaldehyde condenses more rapidly with true than with apparent vitamin C, have been compared on a wide variety of materials, and it has been found that, on the whole, they give similar results.

Further papers are given on the effect of storage conditions on vitamin C in fruit syrups; vitamins in rose-hip tablets; and vitamins in malt extract.

EAST AFRICAN INDUSTRIAL RESEARCH

The first annual report, 1943, on East African industrial research activities from the inception of a co-ordinating research organisation in 1941 to December 31, 1943, has recently been issued. The report covers a large number of subjects, including the utilisation of animal and vegetable products. Studies are described of the processing of edible oils and fats, glycerine production, the use of vegetable oils in internal combustion engines, and the production of shark-liver oil on the East African coast.

Correspondence

Salad Cream and Mayonnaise

TO THE EDITOR OF FOOD MANUFACTURE

DEAR SIR,—Under Salad Cream and Mayonnaise, page 329 of FOOD MANUFACTURE, I have read the report by the Inter-Departmental Committee on Food Standards.

This subject of standardising formulae for this product has been under attention of certain governments for some time—just why I do not know.

The writer has been manufacturing mayonnaise and sandwich spreads for over forty years and was the first to make this product for commercial use in Canada; in fact, we opened up the market and found the sale.

I do not agree that mayonnaise must contain oil to be called by that title. The word " mayonnaise " imparts to the public a certain richness, while salad dressing has an entirely different impression. We have made all these years a *no-oil* mayonnaise which is just as fine and rich in flavour as any other product in which we use cream and butter, and have educated our customers to whip cream and add it to our no-oil

product. To lay down a Law which would stop any manufacturer from applying or using the word "mayonnaise" on a no-oil product would be to oppose an established custom and work a hardship on such firms as ourselves who created the sale for these products. There certainly is a no-oil mayonnaise, and I contend that we for one have the right to call our product by the word "mayonnaise," since we established the product and the name. I would like to know who the men are that consider themselves capable and with enough experience to set up such a Law in this case. You might just as well tell the H.P. Sauce Company what their standards must be, or Lea and Perrin Company. Certainly you are not protecting the public in any way. All products require a statement of contents which covers the public for health purposes.

It is the intention of this company to open a branch factory in United Kingdom when conditions warrant.

You will find that there is a large buying public who do not want oil in mayonnaise, and when they cannot purchase such a product they do not purchase any other kind, but very often make a home-made mayonnaise in their own kitchens.

After reading this article I am assured that the committee knows very little about this product and are certainly not in a position to write any Law on it.

There is another very important point. The people in U.K. at present are not big consumers of this product, and the time to set standards is not now.

Yours very truly,

A. B. BOWRON,
Bowron Products, Ltd.

Hamilton, Canada.

"The Chemical Senses"

TO THE EDITOR OF FOOD MANUFACTURE

DEAR SIR,—I read Dr. Dyson's generous review of my book, *The Chemical Senses*, with interest and pleasure. I trust I may be in order in making further reference to two technical points raised by the reviewer.

1. Dr. Dyson suggests, in relation to Müller's theory of odour: "If odour is a function of dipole moment, the odour of water should be between that of acetone and ethyl bromide." My contention is that the odourless character of water is subjective and not objective. We cannot smell water because it is always present in our olfactory apparatus. For a similar reason oxygen and nitrogen, which on electrochemical grounds might be expected to be odorous, appear to be odourless, since they are always present in the nasal passages (*The Chemical Senses*, p. 175).

I am no supporter of Müller's theory, but I believe that the odourless character of water is not an argument that can logically be used against it, or against almost any other theory of odour.

2. Regarding the "meat" taste, there is of course no inconsistency in sodium glutamate having an intense meat-like taste, and in most of the taste of meat being odour. There is a case recorded by Dr. Ogle (*Medico-Chirurgical Trans.*, 1870, **53**, pp. 263-90), and which was quoted on p. 92 of *The Chemical Senses*, of a person who, as the result of a fall from a horse, lost his sense of smell but retained his sense of taste, and he could not distinguish one meat from another. Perhaps more interesting are the remarks of E. C. Crocker in his just-published book *Flavour*. On p. 51 we read:

"Much has been written about meat flavour, but the subject is still far from clear. Meat flavour is due to something more than sodium glutamate, a substance that contributes much to developing a good chicken flavour in soups and makes vegetarian food more satisfying. Part of the flavour of meat is apparently due to slightly volatile organic acids, and perhaps part is due to nitrogen bases."

I trust Dr. Dyson will not mind my taking up these two points. I feel sure that if he will look on p. 28 of *Flavour* he will enjoy the joke.

Yours faithfully,
R. W. MONCRIEFF.

Bakery Management and Costings

A BOOK* published some months ago is one which can be usefully included in the library of any progressive baker. Written as it is by two men, each an acknowledged master in his own sphere, it is not only informative but eminently readable. Much information is given in the chapters on management, and the section on management remuneration alone would make it a most valuable reference work. This, however, is but one section, and in every other there are figures or details which have a practical bearing on the subject of bakery management.

In the latter part of the book, where costings are discussed, the difference between estimating and costing is made quite clear at the outset. Examples are given for systems of standard costings for bread, but no reference is made to confectionery. Since, however, it is bread costs which are most in the official eye at the present time, the information given should prove most useful.

Finally, the glossary of terms used in costings forms a useful conclusion to any book on this subject.

* *Modern Management for Bakers and Confectioners.* By H. E. Turner and E. Victor Amsdon, F.C.W.A. Pp. 58. London. 7s. 6d. net.

The Antioxidant Properties of the Vegetable Phosphatides

(*Continued from page* 443)

[12] R. W. Riemenschneider, S. F. Herb, E. M. Hammaker, and F. E. Luddy, *Oil and Soap*, **21**, p. 307 (1944).
[13] H. S. Mitchell, *U.S. Patent* 2,113,216 (1938).
[14] Industrial Patents Corporation, *Brit. Patent* 481,619 (1938).
[15] J. L. Jensen, K. C. D. Hickman, and P. L. Harris, *Proc. Soc. Expl. Biol. Med.*, **54**, p. 294 (1943).
[16] H. Jasperson and J. W. Lord, *Private communication.*
[17] C. Golumbic, *Oil and Soap*, **19**, p. 181 (1942).
[18] H. S. Olcott and H. A. Mattill, *Chem. Revs.*, **29**, p. 257 (1941).
[19] A. E. Bailey and R. O. Feuge, *Oil and Soap*, **21**, p. 286 (1944).
[20] B. H. Thurman, *U.S. Patents* 2,201,061-2-3-4 (1940).
[21] H. N. Holmes, R. E. Corbet, and E. R. Hartzler, *Ind. Eng. Chem.*, **28**, p. 133 (1936).

National Flour (82½ Per Cent. Extraction) and Bread

Sixth Report from the Scientific Adviser's Division, Ministry of Food

ON October 1, 1944, the extraction of national flour in Great Britain was reduced to 82½ per cent. This lowering of the extraction followed work which showed that the bulk of the vitamins and minerals in the wheat grain are located in the germ, particularly the scutellum fraction, and in the outer endosperm adjoining the bran. Provided these two fractions are included in the flour, there will be no appreciable difference in the nutritive value of 82½ per cent. as compared with 85 per cent. extraction flour. At the same time, the fall in the extraction makes it possible to exclude about 1·6 per cent. of bran (on the average, 85 per cent. flour contains 4 per cent. bran) and so give a whiter flour and bread. Details of the milling technique necessary to produce a satisfactory 82½ per cent. flour have been circulated to all millers.[1]

Quality of Flour

Mills were allowed about a fortnight to settle down, after which each mill was instructed to send a 6-lb. sample once a week to the Cereals Research Station, St. Albans, for analysis. These covered colour, fibre, ash, added calcium, iron, vitamin B_1, riboflavin and nicotinic acid; in addition, the flours were examined for baking quality.

It was impossible to examine every sample in every respect each week. Thus, the "colour" of every sample was judged each week; vitamin B_1 was determined on samples from all the larger mills every week, and on the remainder once in four weeks, thus covering more than 80 per cent. of the total national flour production—on a capacity basis—every week; calcium (as added creta præparata) was determined fortnightly on all samples; fibre and ash were determined on all samples sent by Ministry of Food inspectors, while the remainder of the mills were covered in about eight weeks; about forty flours were baked every week, thus covering all the mills in six or seven weeks. All mills included in the survey were grouped according to their capacity (five groups: up to 5, 6-10, 11-20, 21-50, and more than 50 sacks/hr.) and their port area (London, Bristol, Liverpool, Hull, Leith, Glasgow, and Northern Ireland). Aliquots of samples from all mills in the same capacity-group in each port area were bulked together to form a total of thirty compound samples upon which riboflavin, nicotinic acid and iron were determined fortnightly.

The production of a whitish flour of high nutritive value is a new development, and so the analytical results are given in some detail.

Colour Index.—Colour (bran speck contamination) was judged on a scale of 0 to 100, where 0 represented a white flour free from visible bran specks, and 100 represented the national average 85 per cent. flour (capacity basis) as manufactured during July-September, 1944.

The percentage of all samples examined that fell within the various colour index classes week by week is shown below. The average colour indexes on a mill basis and on a capacity basis are also shown.

Vitamin B_1.—The percentage distribution of vitamin B_1 values and the weekly average vitamin B_1 value (mill basis) were as shown in Table 2.

The average value for vitamin B_1 over weeks *A* to *D* (during which all mills were covered), on a capacity basis, was 0·88 I.U./gm.

TABLE 1

Colour Index not Exceeding—		*Week Commencing—*						
		Oct. 16. *A.*	*Oct.* 23. *B.*	*Oct.* 30. *C.*	*Nov.* 6. *D.*	*Nov.* 13. *E.*	*Nov.* 20. *F.*	*Nov.* 27. *G.*
10		3	5	4	5	3	2	2
20		5	8	12	19	15	11	15
30		15	21	29	36	29	30	30
40		27	34	42	49	50	48	50
50		46	49	54	66	54	61	62
60		59	65	69	75	68	77	79
70		76	80	79	87	80	85	89
80		85	87	88	91	92	91	94
90		89	92	92	92	93	94	96
100		91	94	94	96	96	97	98
Average Colour Index	Mill basis	59	55	53	47	49	49	47
	Capacity basis	51	45	43	36	38	38	37
No. of samples		226	226	237	246	248	247	254

TABLE 2

B_1 (*I.U./gm.*).	*Week Commencing—* Oct. 16. A.	Oct. 23. B.	Oct. 30. C.	Nov. 6. D.	Nov. 13. E.	Nov. 20. F.	Nov. 27. G.
1·10 or more	2	0	0	0	0	1	0
1·05 ,, ,,	6	0	0	0	1	2	0
1·00 ,, ,,	18	3	4	4	4	4	3
0·95 ,, ,,	38	17	20	11	20	13	11
0·90 ,, ,,	59	38	43	38	45	38	35
0·85 ,, ,,	79	65	62	58	68	65	53
0·80 ,, ,,	91	88	78	84	89	85	78
0·75 ,, ,,	97	96	90	94	97	95	86
0·70 ,, ,,	99	97	97	98	99	97	93
0·65 ,, ,,	100	98	99	100	99	98	96
0·60 ,, ,,	—	98	99	—	100	99	98
0·55 ,, ,,	—	100	100	—	—	100	99
No. of samples	99	118	112	117	112	119	130
Mean vitamin B_1 value	0·92	0·87	0·87	0·86	0·88	0·87	0·85
Per cent. of the total milling capacity analysed	82	84	81	83	81	81	83

Riboflavin, Nicotinic Acid, and Iron.—The average values for these constituents (mill basis) are given in Table 3.

Ash and Fibre.—The average ash and fibre determinations (mill basis) on samples sent by mill inspectors were as shown in Table 4.

Creta Præparata.—The average value found for the amount of added creta præparata over the last complete month (commencing October 30, 1944) was 6·5 oz./sack. The distribution of the figures was as follows:

Creta (oz./sack).	*Per Cent. of all Samples.*
10 or more	4·5
9 ,, ,,	10·2
8 ,, ,,	18·6
7 ,, ,,	36·5
6 ,, ,,	61·3
5 ,, ,,	79·4
4 ,, ,,	90·6
3 ,, ,,	94·7
2 ,, ,,	96·5
1 ,, ,,	98·5

Hence, 60·8 per cent. of all the samples had a value lying between 5·0 and 7·9 oz./sack. This table summarises the results of analyses on 491 samples of flour.

Breadmaking Quality.—A number of flours were taken at random each week, the object being to cover all mills in due course. These flours were baked in the laboratories under ideal conditions, and the resulting loaves judged for volume, colour, and quality of the crumb. The numbers of loaves described as good, fair-good, fair, and poor are given in Table 5.

Out of the 248 samples of flour examined, 60 (= 24 per cent.) showed signs of high maltose due to the inclusion in the grist of sprouted English wheat.

With the fall in extraction from 85 to 82½ per cent., the water absorption of the flour has decreased by ½ gallon per sack. Actually, as shown later, the percentage of Manitoba wheat in the grist has increased from about 40 per cent. in the first six months of 1944 to about 57 per cent. in October and November. Had the percentage of Manitoba remained at 40 per cent., the water absorption would have decreased by about 1 gallon per sack.

The conversion factor of 82½ per cent. flour to bread is approximately 1·33.

Colour of Breadcrumb and Colour Index of Flour.—There was a reasonably good relation between colour of bread and colour index of flour as shown in Table 6.

Correlation between Flour Colour and Fibre, and between Flour Colour and Vitamin B_1 Content

Flour Colour and Fibre.—All samples analysed for fibre were arranged in groups according to the colour index, and the average fibre content for each group was calculated. There is a close relationship between colour index and fibre content, indicating that the colour index can be used to give a fair estimate of the fibre content.

Flour Colour and Vitamin B_1 Content.—All samples analysed for vitamin B_1 during the last com-

TABLE 3

	Fortnight Commencing— Oct. 16	Oct. 30.	Nov. 13.	*Average for Six Weeks.*
Riboflavin (μgm./gm.) ..	1·0	1·0	1·0	1·0
Nicotinic acid (μgm./gm.)	18	18	19	18
Iron (mgm./100 gm.) ..	1·99	1·99	1·84	1·94

TABLE 4

	Week Commencing—						All Samples A to G.
	Oct. 16. A.	Oct. 23. B.	Oct. 30. C.	Nov. 6. D.	Nov. 13 and 20. E and F.	Nov. 27. G.	
Average ash (per cent.)	0·92	0·87	0·93	0·85	0·90	0·82	0·88*
Average fibre (per cent.)	0·27	0·29	0·28	0·32	0·27	0·30	0·29
Average fibre (per cent.) (corrected for added white flour)	0·29	0·31	0·30	0·35	0·30	0·33	0·31
No. of samples	14	8	11	5	7	11	56

* Includes 0·12 per cent. due to added creta.

TABLE 5

Quality of Loaves.	Week Commencing—							Total for Seven Weeks.	
	Oct. 16.	Oct. 23.	Oct. 30.	Nov. 6.	Nov. 13.	Nov. 20.	Nov. 27.	No. of Loaves.	Per Cent. of Total.
Good ..	18	25	29	16	26	31	8	153	62
Fair–good	12	5	8	4	5	4	2	40	16
Fair ..	8	2	6	3	7	6	3	35	14
Poor ..	7	2	3	1	4	2	1	20	8

plete month (commencing October 30, 1944) were similarly arranged in colour-index groups, and the average vitamin B_1 content of each group was calculated. Since samples from the large mills (more than 20 sacks/hr.) were analysed each week, the monthly averages for vitamin B_1 and colour index were calculated for each mill, and these values were used instead of individual determinations. The complete lack of correlation between colour and vitamin B_1 indicates that, in general, millers who are getting good colour in their flour are *not* doing so to the detriment of its B_1 content. This is to be expected since bran, as such, contributes little to the vitamin B_1 content of flour.

Colour Index.	Average Fibre Content. (Per Cent.)	Average Vitamin B_1 Content. (I.U./gm.)
10	0·23 (25)*	0·88 (9)*
20	0·24 (15)	0·86 (29)
30	0·24 (19)	0·87 (47)
40	0·27 (14)	0·86 (41)
50	0·28 (20)	0·88 (34)
60	0·31 (26)	0·86 (35)
70	0·33 (27)	0·85 (29)
80	0·34 (28)	0·88 (16)
90	0·36 (8)	0·89 (7)
100	0·38 (13)	0·89 (5)
100+	0·48 (34)	0·89 (9)

* The number of determinations is shown in parentheses.

Comparison of 82½ Per Cent. Flour with 85 Per Cent. Flour

Average figures for 82½ per cent. extraction flour as given above are set against figures for 85 per cent. flour as given in the Fifth Report[2] (covering 85 per cent. flour samples received during January-June, 1944). (Table 7.)

In the report on high vitamin flour[1] it was predicted that the lowering of extraction by 2½ per cent. would entail a reduction of the bran content of the flour from 4 per cent. to 2·4 per cent., and that the 82½ per cent. flour would have an average fibre content not exceeding 0·3 per cent. This prediction has been justified in the average figure of 0·29 per cent. of fibre (0·31 per cent. when corrected for added white flour). This lowering of fibre content is reflected in the lighter colour of the flour. The ash content has also decreased slightly. The vitamin B_1 content has dropped rather more than the theoretical prediction of 0·02 I.U./gm., and this, taken in conjunction with the drop in riboflavin content, suggests that some scutellum and embryo are being lost to the offals.

The iron content has shown roughly the forecast decrease of 0·16 mgm./100 gm. On the other hand, the nicotinic acid content, instead of decreasing, has actually increased slightly. The explanation of this anomaly is probably to be found in the compo-

TABLE 6

Mean Colour Index of Flours used for Baking.

Colour of Breadcrumb.	Oct. 16.	Oct. 23.	Oct. 30.	Nov. 6.	Nov. 13.	Nov. 20.	Nov. 27.	Average for Seven Weeks.
Very pale ..	34	41	31	35	36	35	32	35 (43)*
Pale	57	52	53	37	49	49	64	52 (33)
Fairly pale ..	97	80	63	65	55	72	73	71 (18)
Brownish† ..	—	—	95	—	95	90	—	92 } (4)
Dark brown ..	—	—	—	—	100+	100+	—	100+ }

* Figures in brackets are percentages of total number of loaves examined.
† "Brownish" corresponds to loaf made from average 85 per cent. extraction flour.

sition of the grists used in milling the 85 per cent. flour analysed during the first six months of 1944 and those being used for the 82½ per cent. flour in October and November, 1944. Table 8 gives details of the grists.

The higher Manitoba content of the grist used in making 82½ per cent. flour is reflected in the higher protein content of this flour compared with 85 per cent. flour.

Further, Manitoba wheat is richer in nicotinic acid than English wheat. An average figure for Manitoba wheat is 60 μgm./gm. against 45 μgm./gm. for English wheat.

The amount of added white flour during 1944 has varied between 5 and 12½ per cent. The bulk of this flour is Canadian G.R. (fortified with vitamin B_1 to a level of approximately 1 I.U./gm.), but small quantities of Plate and, just recently, American fortified flour have also been added. Average figures for this last flour are vitamin B_1 1·5 I.U./gm.; riboflavin 2·7 μgm./gm.; nicotinic acid 36 μgm./gm.; and iron 2·9 mgm./100 gm. It is understood that during the period when the 82½ per cent. flour samples were analysed the overall addition of American enriched flour was well below 2 per cent. Even at 2 per cent. level, however, the American flour would only increase the values for 82½ per cent. flour by the following amounts: vitamin B_1, 0·01 I.U./gm.; riboflavin, 0·03 μgm./gm.; nicotinic acid, 0·4 μgm./gm.; and iron, 0·02 mgm./100 gm. Plate flour and Canadian G.R. flour (except as regards vitamin B_1, where it has no effect) would act in the opposite direction.

Quality of Bread

971 commercial loaves from different parts of Great Britain have been examined during the period October 1 to November 30, 1944. These were graded for quality (commercial standards) with the following results:

Good	=	98 loaves	=	10·1 per cent.
Fair-good	=	427 ,,	=	44·0 ,, ,,
Fair	=	266 ,,	=	27·4 ,, ,,
Poor	=	180 ,,	=	18·5 ,, ,,

Unfortunately, that harvest was a particularly wet one, and much British home-grown wheat sprouted in the stack. Such wheat has a high maltose content and tends to give a loaf with a doughy crumb. The results, described earlier in this report, showed that some 24 per cent. of the flours received from mills gave loaves showing high maltose damage. Of the commercial loaves, 298 (= 31 per cent.) showed the same defect, and as a result the total percentage of "Good" and "Fair-Good" loaves (54 per cent. in all) was lower than would otherwise have been the case. There was, however, a marked improvement in the colour of the loaves compared with those made from 85 per cent. flour.

This work was carried out at the Cereals Research Station, Ministry of Food, St. Albans.

REFERENCES

[1] "High Vitamin Flour" (Ministry of Food, October, 1944). *Cf.* also *Milling*, November 4, 1944.
[2] *Nature*, 1944, **154**, 582.

TABLE 7

		82½ *Per Cent. Flour.*		85 *Per Cent. Flour.*	
Vitamin B_1 (I.U./gm.) ..	(Sample basis)	0·88	(807)*	0·975	(346)*
Riboflavin (μgm./gm.) ..	,, ,,	1·0	(723)	1·3	(346)
Nicotinic acid (μgm./gm.)	,, ,,	18	(723)	17	(346)
Iron (mgm./100 gm.) ..	,, ,,	1·94	(723)	2·07	(346)
Protein (per cent.)	,, ,,	11·6	(245)	10·7	(346)
Fibre (per cent.)	,, ,,	0·31	(56)	0·50	(346)
Ash (per cent.)	,, ,,	0·88	(56)	0·98	(346)
Colour Index	,, ,,	51	(1684)	—	—
Colour Index	(capacity basis)	41	(1684)	100	(200)

* The values represent averages for the number of samples given in parentheses.

TABLE 8

Average Composition of Grist in Samples Analysed.

	Manitoba Wheat.	*Home-grown Wheat.*	*Other Wheat.*	*Barley and Rye.*
85 per cent. extraction survey:				
January	37·4	59·5	0·5	2·6
February	39·7	57·3	0·5	2·5
March	35·3	61·1	2·1	1·5
April	38·3	58·4	2·8	0·5
May	42·7	53·2	3·6	0·5
June	42·6	54·2	3·0	0·2
82½ per cent. extraction survey:				
October 16 to 30	57·0	38·1	3·8	1·1
October 30 to November 13 ..	57·1	38·1	3·8	1·0
November 13 to 27	57·7	37·7	3·7	0·9

Sugar Factory at Dolní Beřkovice.

The Food Industry in Czechoslovakia

BEFORE the war the food industry in Czechoslovakia was governed by the big banks, whose interests were directed mainly towards the sugar refineries, distilleries, breweries, etc. Apart from these, there developed the agricultural co-operatives, but although these were originally founded by the small and medium farmers they eventually went into the hands of the agrarian oligarchy. Their political field of action was the so-called Agrarian Party, so sadly famous for its collaboration with the Nazis even before Munich. One of their feats was to force the Government to abolish the spirits monopoly which had been bringing into the treasury one milliard kronen yearly—roughly one-tenth of the total revenue! On the other hand, very large sums were devoted to the corruption of public life and for the propagation of Nazi principles. No wonder, therefore, that wide masses of the population are asking for nationalisation of these industries and that the Government is determined to transform this wish into reality.

Nationalisation of Industries

The nationalisation is not to be carried out mechanically. Each case will be dealt with individually and due regard will be paid to the

Filling cartons with margarine in a Czechoslovakian factory.

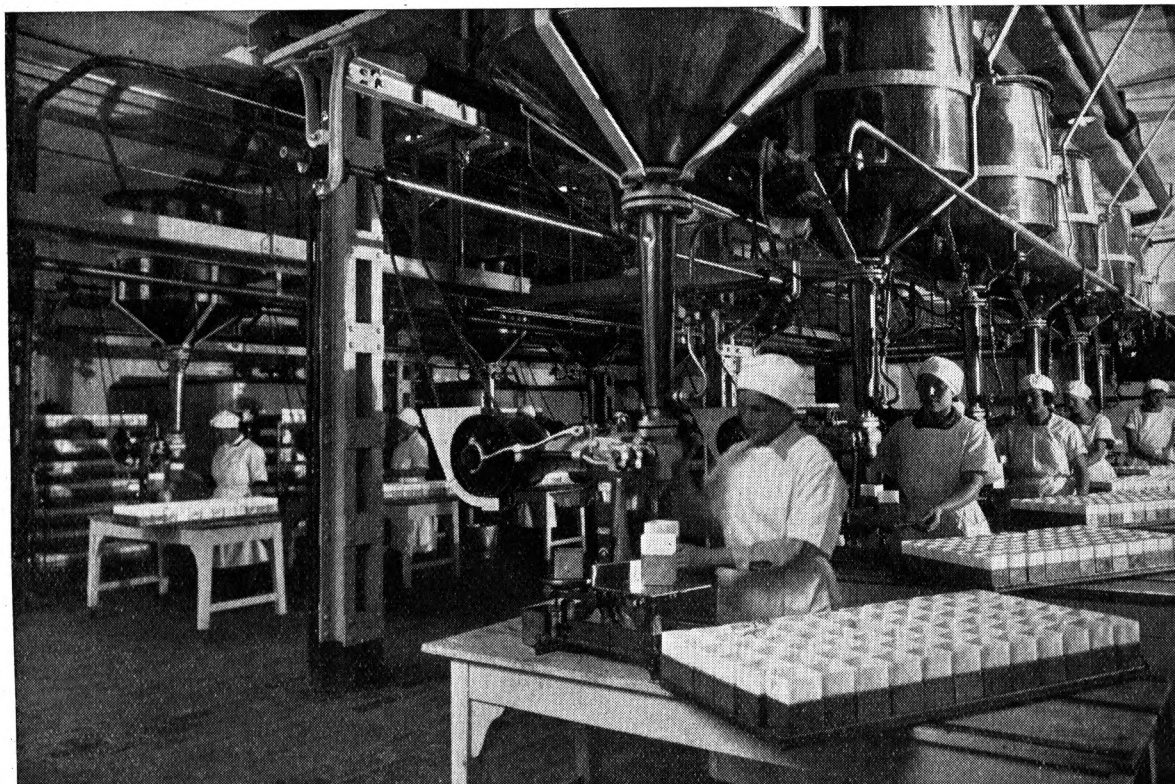

nature of each individual branch and to the interest of both the producers of raw materials and the consumers concerned. The sugar industry will be nationalised in its entirety. Each factory will be directed by a committee of five, two of whom will sit for the beet growers, two for the shop steward organisation, and one for the Government. These members will be nominated by the Government, according to the recommendation of the organisation concerned. Distilleries, refineries, and mineral water sources will also be nationalised.

In the field of synthetic fats and allied industries it is proposed to nationalise all factories employing more than 150 workers. There also will be nationalised: all breweries with a yearly production of more than 100,000 hectolitres, all flour mills with a capacity of more than 6 wagons per day, and finally chocolate and sweets factories employing more than 500 workers. Bakeries will not be nationalised at all. Smaller undertakings which do not at present overstep the permitted limit will not be nationalised automatically should their proportion overstep those limits, but only when this is in the interest of all concerned and in full consultation with the owner. Thus it is quite possible that both types of undertakings will exist side by side and free competition will develop.

Czechoslovak Agriculture

Czechoslovak agriculture suffered through the occupation to a much lesser degree than did its industry. If it were not for the fact that the war in its last phase passed over the eastern part of its territory it might actually have been possible to say that some real progress has been made. But the losses during the last few months of the war in Slovakia have been heavy, and the situation is made more difficult by the fact that all neighbouring countries have been plundered and that Czechoslovakia, owing to its peculiar geographical position, is more dependent on a successful solution of the transport problem than are most other states.

In shortest supply are meat and fats. For the time being the only article that can be exported (and this is being done in the form of barter) is sugar. In 1937-38 Czechoslovakia exported 3,282,692 metric tons of sugar out of the 7,565,263 tons produced. There was, therefore, 27 kg. of sugar per head per year as compared with 19 to 20 kg. today. Since more than half of the sugar exported went to Germany and Italy the prospects of a successful solution are good.

The spirit-distilling industry was less important from the point of view of export. In 1936 there were in existence 900 distilleries, which employed on the whole about 5,000 workers and produced about 940,000 hectolitres yearly, of which about 115,000 were destined for export, industry, motor fuel, and for the production of vinegar.

The reconstruction of the synthetic fats industry will be the most difficult task of all, since it depends to such a large degree on import, and this involves the problem of communications as well as that of fixing the rate of exchange.

State Economic and Industrial Structure

The political changes are, of course, accompanied by changes in the economic and industrial structure of the State. This will involve on the one hand a partial de-industrialisation of the over-industrialised so-called Sudeten territory, and on the other the industrialisation of the prevalently agricultural Slovakia. This will present the State Planning Office and the Ministries of Food, Agriculture, and Foreign Trade with a unique opportunity to modernise and rationalise, among others, also the food industry. It is proposed to improve the production of preserves and subordinate this industry to the sugar industry, to increase the production of canned meats, and to improve the methods of canning according to latest scientific principles; finally, to cultivate the production of some specialities as exchange for foods from other countries so as to vary the fare of its own population and also as a suitable export article.

Biology for Ninepence

THOUGH bearing the Penguin imprint, a recent publication does not belong to any of the avifaunal broods with which Messrs. Penguin Books have made us familiar, and is No. 1 of a new series.* It consists of seven articles or essays: two about plants and five about human or animal biology. Whether the articles are reprinted or original is not quite clear, though, from the absence of acknowledgments to former sources, they may be presumed to be original. A reviewer, if he is not a zoologist, has a difficult task. His impulse to congratulate Messrs. Penguin Books on having provided a new outlet for scientific publication in journal (or is it book?) form must be tempered by wondering whether it is worth while, and to what audience this curiously assorted collection of essays is addressed. A zoologist would seemingly have no such doubts.

The standard of the essays is high, but they are no more sequent than is an issue of *Biological Reviews*. The point is that the latter is written for specialists in particular branches of biological science and is a "library" periodical, whereas *New Biology* is hopefully addressed to the ordinary reader and to teachers of Science (with a capital S) in schools. A zoologist is likely to be grateful for the book, and the ordinary man may buy it, but will he or can he read it?

The article which can be commended to everyone is that on the origin and history of the potato. This employs for the most part ordinary language. The brief

* *New Biology*—I. Edited by Michael Abercrombie and M. L. Johnson. Penguin Books, 1945. Pp. 118. 9d. net.

article on trace elements in plants is not intended to be other than academic, but it would have been more interesting to food chemists, and the public at large, if it had given fuller consideration to the effects of trace elements on crop quality. The remaining articles consist of two on sensation and neural anatomy, one on human vital statistics, one on malaria, and one on wireworms in relation to war-time agriculture.

To sum up this miscellany of such diverse scope and appeal is almost like adding shillings and yards. The main question is: How is this biology new? The essays are up-to-date, and contain many new facts; but the important thing is outlook. So far as the periodical can be said to be new, its novelty is that of a teratoma rather than of the organised being which could be expected now.

In the last quarter of a century there has been a vast change in biological outlook and methodology. While descriptive and classificatory studies (such as the anatomical) retain their importance, there has been an entirely new incidence of interest in the behaviour of populations rather than individuals. This interest is reflected by Mrs. Miles's essay on wireworms, but in such a way that only those in the know can find the connexion. The glossary is no substitute for a lead from the editors, who have done nothing specific to indicate what is new in biological trends; yet by doing that they would have performed the greatest service for the ordinary reader wishing to learn about modern biology.

Good as the individual articles are, I feel that *New Biology* is an opportunity misused. That, however, need not prevent anyone from being grateful for the chance of having two excellent neurological essays for ninepence, and those who buy this newcomer, will, I am sure, think that the potato article is alone well worth the money.—HUGH NICOL.

The Preservation of Potatoes

IN a paper read by Mr. Theodore Rendle at a joint meeting of the Food Group and the Bristol section of the Society of Chemical Industry on November 1, 1945, he opened his survey of various methods for the preservation of potatoes by referring to the traditional clamping by growers, and while in temperate climates this very largely met the need for preservation, certain circumstances, including military requirements in war-time, gave rise to the need for other methods of providing this staple food in pre-packed and, if possible, pre-cooked form. He referred to the three main methods of preservation of vegetables in general—namely, cold storage and its allied development, quick freezing, canning, and dehydration or drying. He showed that potatoes were not suitable for quick freezing, and that while a heavy tonnage had been canned for military needs this was hardly the ideal method for the packing and transport of this vegetable. Reference was made to potato flour and to the American product "riced potatoes." Dehydration was dealt with at some length, both in the form of strip potatoes and as pre-cooked mashed potato powder. Considerable attention was paid to the last-mentioned item, and it was pointed out that a successful result could only be obtained by a process: (*a*) which gave a final product in a fine state of division; (*b*) in which the vegetable cells were not unduly ruptured; (*c*) in which a horny skin formation on the surface of particles during drying was avoided.

Several patented processes were briefly described and details were given of the principle employed in the method described in a specification accepted by the British Patent Office—No. 566167. The importance of this process was stressed inasmuch as the other processes, so far as the speaker was aware, were limited to laboratory experiments, this method had been in commercial production for a considerable time. Indeed, all the mashed potato powder hitherto produced commercially (amounting to several thousand tons of product supplied to the Services) has involved the use of the subject-matter of this patent. Mr. Rendle concluded his paper with a comparison of some of the properties of potatoes preserved by canning and dehydration in the form of both strip and mashed potato powder.

A New Whale Factory Ship

(*Continued from page* 444)

the introduction of special continuous expellers, excess oil and moisture are removed from the meat, after suitable pretreatment, after which the meat passes to special sterilisers and continuous steam-heated vacuum driers in which the remaining moisture is driven off. After drying, the meat is ground to meal and bagged.

Digestibility of Whale Meat

Whale meat, which at one time was thrown overboard after the oil content had been extracted, becomes a rich golden brown powder, entirely free from any fishy taste. Samples produced in a pilot plant have been found to have a protein content of 84·56 per cent. with 98·9 per cent. digestibility. No beef steak cooked in the ordinary way has anything approaching this digestibility, and it is hoped that the food will prove of great value to the peoples of Europe.

Liver Oil

The recovery of oil from the livers is by a process involving a combination of dehydration and solvent extraction, carried out with the exclusion of air in order to retain vitamin content. After extraction the meal is dried, and is of a chocolate-brown colour.

Trade News

De-zoning of the Biscuit Industry

Following the announcement made by the Minister of Food, the Cake and Biscuit War-time Alliance is planning for the de-zoning of biscuits to take effect as from Monday, April 29, 1946.

Problems of labour, raw material, and adequate transport will have to be faced, and it is understood that at least six months' organising is necessary before manufacturers can get supplies of biscuits to anything like all the areas in which they distributed before the war.

It is, however, hoped that by the date indicated there may be an improvement so far as labour, raw materials, and transport are concerned, so that retailers throughout the country may be able again to display the wares of biscuit manufacturers whose names were familiar but whose goods have not been seen during the long period of controls.

Shetland Herrings

A proposal that the Herring Industry Board should act as marketing and development agents over the whole of the herring fishing in Shetland has been unanimously agreed to by the curers and fishermen. A comprehensive scheme for the improvement of the Shetland herring fishing industry was outlined by the chairman of the Herring Industry Board when he recently visited the Shetlands, addressing meetings of the fishermen and curers.

The Board have since received notification that they, too, have unanimously agreed to accept the proposals and give the Board their full support.

Plans for the new scheme are now being worked out by the Board.

New Batchelor Factories in Dublin

A new £40,000 factory erected by Messrs. Batchelors and Co. (Ireland), Ltd., pea packers and canners, at Bannon Road, Cabra, West Dublin, was opened by the Eire Minister of Agriculture, Dr. James Ryan recently.

Mr. Arthur Lawson

Mr. Arthur Lawson resigned his appointment as secretary of the National Society of Caterers to Industry at the end of September to take up a new appointment with the Nitrate Corporation of Chile, Ltd.

Mr. A. Schwarz

Mr. A. Schwarz, director of Messrs. Polak and Schwarz's Essencefabrieken, Zaandam and Hilversum (Holland), and of Polak and Schwarz (England), Ltd., Enfield, was in London recently on a special mission on behalf of the Netherlands Government.

He regrets that the time at his disposal did not permit him to visit many of his business friends in this country but hopes to see them on a future occasion.

Northern Aluminium Co., Ltd.

On October 15 the Northern Aluminium Co., Ltd., reopened its London Sales and Enquiry Office at a new address: 11, Bruton Street, W.1. The manager of this office, which covers the whole of South-Eastern England, is Mr. E. V. Hill.

Another Sales and Enquiry Office, to cover South-West England and South Wales, is being established at Rogerstone, Newport, Mon., where the Northern Aluminium Company has a large works producing sheet aluminium and extrusions.

Institute of Distribution

Owing to growth of membership, and in the Institute's activities generally, a larger secretariat has become necessary. Mr. Gordon Heynes, C.A., of Messrs. Gordon Heynes and Co., has been appointed as secretary, and the Institute's Registered Office is now at 40, Pall Mall, London, S.W.1.

The Institute was formed in 1945 by business and professional men, of widely varied interests, who believe that the processes and economy of distribution should be the subject of continuous scientific study. More than a hundred sorts of business concerned in the distribution of goods are now represented in the membership.

Rowett Research Institute

Dr. D. P. Cuthbertson, Glasgow, is the new director of the Rowett Research Institute at Bucksburn, near Aberdeen, where he succeeds Sir John Boyd Orr, who has been appointed the first director-general of FAO. Dr. Cuthbertson, who is a graduate of Glasgow University, is also a leading authority on protein metabolism, and has recently returned from Newfoundland, where he has been acting as adviser on nutrition to the Government. He was Grieve Lecturer in Physiological Chemistry at Glasgow University, but in the early years of the war he went to the Medical Research Council and took part in the planning of schemes for the feeding of the people of the occupied countries. He is a B.Sc., D.Sc., and M.D. of Glasgow.

Release of Storage Premises

Return to industry of premises requisitioned during the war for storage purposes is to be accelerated. Wherever possible more factories are to be turned over to production for the home and export markets.

Up to September 30, 1945, about 138,000,000 square feet of industrial floor space was still held under requisition by Goverment departments; premises covering about 12,000,000 square feet had been released to industry, and a further 12,000,000 square feet was in process of being released.

Provided that disposals depots, labour, and transport are forthcoming, the aim of the Government is to ensure the release of the remaining factory accommodation by the end of 1946.

Release of space is to be accelerated, apart from the disposal of surplus stores through trade channels, by scrapping obsolete war material and removing other stores to permanent depots.

Many types of munitions must, of course, be retained pending decisions on future defence requirements. Storage and disposal departments have, however, been instructed that where stores have to be retained they must be removed from factory space.

Penicillin in Cheese

Speaking on bacteriology as applied to cheese-making and milking, at a reunion of cheese-makers at the Somerset Farm Institute, Cannington, Mr. J. W. Edgell, of Bristol University, said that some day cheese containing penicillin might be made. He considered that this would give a big boost to the industry provided they had sufficient milk.

Trade Agreement Terminated

The Board of Trade have received from the Foreign Office a copy of a note, dated August 21, 1945, from the Argentine Minister for Foreign Affairs to H.M. Ambassador in Buenos Aires giving formal notice of termination of the Agreement of Trade and Commerce concluded between the United Kingdom and Argentina on December 1, 1936.

This notice has been given under Article 13 of the Agreement, which provides that it shall remain in force until the expiration of six months after the date on which either contracting Government shall have given the other notice of termination through the diplomatic channel. The agreement is, therefore, due to expire on February 21, 1946.

Private Trade with Denmark

Following the conclusion of a Financial Agreement and the recent removal of T.W.E. restrictions on current trade with Denmark, normal commercial relations between Denmark and the United Kingdom can now be resumed and trade can in general be handled through private channels.

The Danish Government are prepared to consider the issue of import licences to private traders for the import of goods into Denmark. In the case of foodstuffs, however, the Danish Government have agreed for the time being to centralised purchasing, arrangements for which will be made through the Danish Supply Mission.

United Kingdom exporters wishing to sell goods to traders in Denmark should apply to the Export Licensing Department of the Board of Trade in the normal way if the goods are subject to export licensing.

Marconi Instruments, Ltd.

In order to provide sales and service facilities in the area not possible during the war years, Marconi Instruments, Ltd., have now established a Northern Office at 30, Albion Street, Hull, telephone No. Hull 16144, with Mr. D. J. Taylor, Northern representative, in charge.

The British Aluminium Co., Ltd.

The British Aluminium Co., Ltd., temporary head office, Salisbury House, London Wall, London, E.C.2, announce that their telegraphic address has been changed to Britalumin Ave London. Address for cables will be Britalumin London.

Food Equipment

We have received a series of leaflets from J. G. Jackson and Crockatt, Ltd., describing some improved designs of food-handling equipment. Among these is a machine for granulating moist and sticky powders prior to tableting. Details of a dry granulator handling breadcrumbs, rusks, sausage filling, breakfast foods, etc., are also given, together with descriptions of a varied range of filling machines for powders, meat pastes, etc., both fully and semi-automatic.

Waste Paper Salvage

A leaflet emphasising in a striking way the continued urgency of supplies of waste paper has recently been published. The importance of fibreboard to the country's domestic economy, into the manufacture of which a considerable quantity of waste paper enters, is stressed.

The reserve stocks of raw material are now almost completely exhausted; the re-use of containers of all kinds has reached its limit; and now supplies of raw material in the shape of waste paper have begun to fall to a point where, unless something is done, it will not be possible to maintain supplies of packing materials for the nation's needs.

It is hoped, with the co-operation of the local authorities, to arrange for an intensive publicity campaign in each area which co-operates with the mill in waste paper salvage.

War-time Achievement

A group of firms under the chairmanship of Mr. W. Hallitt, a director of Thomas Broadbent and Sons, Ltd., Central Ironworks, Huddersfield, was formed in 1942 for the building of submarines under conditions of utmost secrecy.

These vessels were constructed and fitted out completely in the secret bay at Broadbents, and, apart from scientific articles, all mechanical details were manufactured by the firm.

On completion, the submarines, camouflaged by wooden framework and tarpaulins, left the works on special road bogies towed by tractors, and were then loaded on to special trains for the Firth of Clyde.

Aluminium Development Association

The Aluminium Development Association is the central technical organisation of the aluminium industry, responsible for fostering the extended application of aluminium in all forms. The association comprises the principal producers of the virgin metal, the fabricators of wrought aluminium alloy products, and leading members of the foundry section of the industry.

The association has an extensive Information Service, which is available without obligation to all interested in the use of aluminium. A series of technical information booklets is also in course of preparation, and to date the following nine have been issued:

No. 1. Handling, Storing, and Transporting Wrought Aluminium Alloys.
No. 2. The Properties of Wrought Aluminium Alloys.
No. 3. Heat-treatment of Wrought Aluminium Alloys — Part 1: Practice.
No. 4. Heat-treatment of Wrought Aluminium Alloys — Part 2: Equipment.
No. 5. Fusion Welding of Wrought Aluminium Alloys.
No. 6. Resistance Welding of Wrought Aluminium Alloys.
No. 7. Machining of Wrought Aluminium Alloys.
No. 8. Riveting of Wrought Aluminium Alloys.
No. 9. Spinning and Panel-Beating of Aluminium Alloys.

Britain Revisited

ADVICE TO BRITISH EXPORTERS

FOLLOWING a visit to this country a trenchant letter by Patrick O'Hea, issued by the British Chamber of Commerce in Mexico, gives some straight-from-the-shoulder advice to British exporters to Mexico. He is a trifle apprehensive that despite the fact that the free world watched Britain with admiration during the darkest days of the war, there is a danger that the effort upon which the country is now embarking, the unromantic, unspectacular struggle for the reconstitution of its social life and economic being, will be inadequately comprehended unless it has interpreters, each in his particular non-British medium. Until now the British Chamber of Commerce in Mexico has striven to foster abroad the best interests of British trade and to co-operate in the directing and expanding of British exports. To this task now is added that of being interpreters of Britain in this medium—lest the world forget. Treating of agents, Mr. O'Hea points out that these are still a bottleneck in foreign trade, and there still persists on our part a recklessness and improvidence in the matter of selection and naming of representatives that calls for correction.

He makes two practical suggestions:

1. Require of your agent or representative that he renders you periodical reports upon the market in relation to your products and competitive activities; and make of such reports a condition of his retaining your representation. No reports, no continuance of your agency.

2. If you must let your agent run around filling his pad with orders as fast as he can lick his pencil, of which the only meaning is that the outside world is a present, but not a future, vacuum in the matter of merchandise, then at least insist with him that into such orders must be clearly written, and accepted by the buyer, the anticipated delay in delivery. Unless orders for scarce and remote goods carry such a time-clause, they are merely a means of mutual deception: to your customer by leading him to think that delivery will shortly be effected, for the average agent will always promise this; and to yourselves, fooled by apparent orders which ultimately will be cancellations.

Re-Use of Packing Material

Vital to trade recovery is the recovery of wood and fibreboard cases, drums, and sacks for the delivery of essential foods and domestic products to shops and warehouses.

The Container Recovery Service during the war collected over 172,000,000 such packages and put them back into service. In one year no less than 5,486,418 returned containers were used by one famous margarine factory alone. This represented packing material for the yearly rations for 11,848,911 persons.

Unknown to their customers and the public, bakers, chemists, grocers, and traders generally added their great share of this job to the many other tasks which war forced upon them. It was an unspectacular but magnificent contribution to the war effort.

While the present shortage of raw materials lasts the re-use of cartons, boxes, etc., must continue. Retailers and wholesalers everywhere are urged to help trade recovery by carefully opening and saving all usable containers. Particularly does this apply to all packages bearing the C.R.S. injunction to save for collection by Container Recovery Service.

Wigan Factory for Heinz

The Board of Trade announces that part of the Ministry of Supply factory at Standish, Wigan, has been allocated to H. J. Heinz and Co., Ltd., for the production of foodstuffs. They will eventually employ about 1,000 people.

The factory was formerly a cotton mill, but during the war was occupied by I.C.I. Metals, Ltd.

Food Education Society

The Food Education Society, since it was bombed, re-established, and reorganised, has passed through five years of war into the present period of reconstruction for peace. Taking into consideration war difficulties and shortages of paper and personnel, I hope you may think we emerge not without some success, states Dr. T. H. Sanderson Wells, chairman of the Society.

To-day the Society is widely quoted, not only in the Press in this country, but in America and the Dominions. Ministers of the Crown and high public and scientific notabilities have taken part in its conferences and lectures. The records of these activities, many of which have been published, constitute a mine of information which, when paper and funds are available, might be edited to form a valuable book of reference.

Activities for consideration are:

(1) Conferences on school meals and on sources of fresh vegetables (gardens, allotments, etc.).

(2) A Food Education Society exam. in elementary knowledge of right feeding for health. (A schedule was drawn up and a Board of Examiners constituted.)

(3) An International Conference on the relationship between food and health. (Preliminary contacts with America, Canada, Australia, South Africa, and New Zealand have been favourable.)

(4) Formation of a panel of lecturers whom it is hoped may be available shortly to Women's Institutes, caterers, and other organisations.

Some years ago such a conference was held on world religions. A small committee collected £150 and acquired the loan of a hall for ten days. Chairmen were secured, experts read papers morning and afternoon. A publisher undertook to produce a report at his own expense. The total cost was £152 12s. 0d. A valuable contribution to religious knowledge resulted. If someone would inaugurate a small committee to treat national diets on similar lines, valuable information would be secured, some of which might otherwise be eventually lost.

The voluntary services hitherto so generously given need relief,

and our urgent need is for a reliable income with which to pay a shorthand typist and office expenses—say, £500 per annum. Last year one generous benefactor donated £200 for clerical and office expenses. This provided us with a much-needed reserve, without which our last programme of lectures could not have been carried out. An endowment subscription (covenanted for seven years but terminated at death) enables us to reclaim income tax. At 10s. in the pound, this means that such a subscription of £50 per annum would bring the Society £100 per annum. If someone would organise a committee to collect, say, one hundred endowment subscriptions, an income which could be relied on for seven years would be forthcoming and many activities at present impossible could be undertaken.

The Bread Question has been closely considered. As a result we have printed *The Political Loaf* and also extracts from the House of Lords Debate on Bread, in the hope that members of the Society may call together friends and neighbours and place the facts before them.

Food is the main factor in the production of growth, of tissue resistance, and bodily activity. Ill-feeding produces disease both of mind and body. Food will be the main problem for all peoples during the next few years. To do its work the Food Education Society requires adequate funds and efficient workers.

Society of Instrument Technology

The Programme for the coming session is detailed below:

December 13, 1945.—"Automatic Temperature Control of Jacketed Pans," Mr. G. H. Farrington.

January 22, 1946.—"Electronic Controls for Resistance Welders," Mr. B. G. Higgins.

February 26.—"The Effect of Design of Boiler Auxiliaries on the Choice and Performance of Automatic Control," Mr. J. E. O'Breen.

April 4.—"Production of Charts for Recording Instruments," Mr. L. B. Lambert; "Recorder Inks," Mr. C. S. Harman; "Recorder Pens," Mr. F. C. Knowles; "Recorder Clocks." (Author to be announced later.)

May 28.—"The Design of Automatic and Manually-Operated Control Systems," Dr. A. Porter.

OBITER DICTA

- The more we tinker with natural foods the less nutritious they become.—*Lord Horder.*
- I'm going to join the Army again. I can't get enough to eat. I feel only half alive on civilian rations.—*A recently demobilised soldier.*
- As scientists, we hold that no political control, no Government, no laws can arrest the march of science.—*Mr. C. S. Garland.*
- The idea that nuclear energy will at once revolutionise society and enable us to live a freer and happier life is, in my view, just moonshine.—*Lord Cherwell.*
- A number of nutritionists thought that millers were crooks and a number of millers thought the nutritionists were cranks. I thought it would be a good idea to get them together. —*Lord Llewellin.*
- Charity between nations is possible under the constitution of the Food and Agriculture Organisation and will undoubtedly do more for lasting peace than armies, plans, and atomic bombs.—*The Canadian Postmaster-General.*
- I have always been a loyal servant of the Minister and will be just as loyal to Sir Ben Smith as I was to Lord Woolton. We are his servants and have to do as we are told. —*Alderman J. Marshall, Croydon Town Council.*
- As the nation's provision merchant I am no fool. I quite understand there are 22,000,000 people in this country who are out to beat the Minister of Food. I don't squeal at that, and I hope they won't squeal if I catch them.—*Sir Ben Smith.*
- The world battle line in industry is drawn not between management and labour, but between those who battle for control and those who battle for teamwork. If industry becomes the battleground of the battle for control, it becomes the graveyard of our hopes for the future.—*Mr. John W. Nowell.*
- There was a black market in eggs—a very big black market —there was not one-third of the output going through the Government packing stations today. People could get six shillings per dozen like tumbling off a stool.—*Mr. R. Rostron, Chairman of the Poultry Association of Great Britain.*

Society of Chemical Industry

The following meetings have been arranged by the London section for 1946:

January 7, 1946.—Chemical Society's Rooms, Burlington House: "Carbon Blacks—Their Manufacture and Use in Industry," Alan Speedy, M.I.Chem.E., F.I.R.I.

February 4, 1946.—Chemical Society's Rooms, Burlington House: Joint Meeting with the Food Group: "The Treatment of Water for Food Manufacturing Purposes"; "Purification of Water for Food Purposes," G. Carter, B.Sc., F.R.I.C.; "Removal of Taints from Water," F. Howard, A.M.C.T., and E. C. R. Spooner, M.Sc., B.E., D.Phil., M.I.Chem.E.; "The Role of Ionic Exchange in the Treatment of Water," E. L. Holmes, M.Sc., A.R.C.S., and E. I. Akeroyd, B.A., B.Sc., Ph.D.

February 13, 1946.—The Royal Institution, Albemarle Street, W.1: Jubilee Memorial Lecture: "Science and Packaging," Dr. G. L. Riddell.

March 4, 1946.—Chemical Society's Rooms, Burlington House: "The Rare Earths," J. Newton Friend, D.Sc., Ph.D., F.R.I.C.

April 1, 1946.—Chemical Society's Rooms, Burlington House: "A New Advance in Chemotherapy," Dr. L. P. Walls, M.A.

May 6, 1946.—Chemical Society's Rooms, Burlington House: "Penicillin," Dr. E. Lester-Smith, F.R.I.C.

Institution of Factory Managers

The annual general meeting of the Institution of Factory Managers will be held at the Bonnington Hotel, London, on Saturday, January 26, 1946, at 3 p.m.

Thompson Bros. (Bilston), Ltd.

Mr. A. J. Lowe, London manager for Thompson Brothers (Bilston), Ltd., has reopened the London office at Aldwych House, W.C.2. Phone: Holborn 1416.

Conference on Scientific Films

A CONFERENCE on "The Film and Science" opened under the chairmanship of Mr. John Maddison (Northern Area representative of the Association, and chairman, Leeds Scientific Film Society) on August 31, 1945.

Giving civic welcome to the delegates, the Mayor of Huddersfield, Alderman Sidney Kaye, said that the association was performing a valuable function by helping to destroy the conception that science was the perquisite of the brainy few.

A number of addresses were given during the three days' sessions, and many interesting aspects of the subject were presented by the speakers.

The beginnings of a scientific culture were shown by the existence of twenty or thirty film societies up and down the country, all bringing science to the doorstep of the citizens.

The duty of science was to protect people from making blind assumptions. Films should fall into three categories: those which deal with the established sciences; those presenting the facts as known, with some further attempt to arrive at conclusions from them; and those which give education in doctrines and values.

Another lecturer, giving an account of his eleven-year study of visual education by means of the camera, said that the film could bring large-scale processes into the remotest lecture-room, taking its place beside other training methods. For fullest success, the instructional film must cease to be a commercial proposition, and have its finances secured.

The nature and use of the film strip—a continuous loop of still pictures which retain a fixed sequence and had the advantage of being readily catalogued and filed, light, portable, and not easily damaged—was the subject of another address. The film strip had proved its usefulness in classroom work, and was especially adapted to revision.

Owing to the remarkable progress in screen development, the film as an instrument of scientific investigation has attained an important role. Such films use time-lapse, photomicrographic, high-speed, and infra-red techniques. Slow-motion cine-photomicrography and the use of infra-red had proved of particular war-time value, assisting in the study of such widely different matters as gunnery and the motility of bac-

From the point of view of film production it was stressed that the cinema held a close parallel to printing, ranging from "highly specialised volumes" to "light and enjoyable magazines." The power of the film was immense, and the new interest in documentaries an exciting thing which should be used for the good of all people, as the message of a picture was understandable in many corners of the earth.

One of the final papers described X-ray adventures among the proteins and other molecular giants. It demonstrated the common structural thread which runs through all matter. The lecturer contrived to give the quest for ultimate knowledge a dramatic and exciting quality, for it was seen to connect with all the sciences and to represent a fundamental line of attack against cancer.

Goods from Italy

It was recently stated, with reference to payment for goods imported into the United Kingdom from Italy, that "Payment by the United Kingdom trader in accordance with the contract terms should be made to an Italian sterling account."

Traders should note that post-liberation sterling accounts have been opened by the Banca d'Italia with the "big five" banks (*i.e.*, Westminster, National Provincial, Lloyds, Barclays, and Midland Banks) and with the Bank of England; the Banca d'Italia are understood to be applying a rate of 400 Italian lire to the £. Payment by the United Kingdom importer in accordance with the contract terms can be made to these accounts through normal banking channels. United Kingdom importers are reminded of the necessity of complying with the United Kingdom exchange control requirements, full details of which can be obtained from any bank.

Traders are reminded that import licences will not, in general, be granted for goods not, for the time being, licensed from other countries.

B.E.T.R.O. Members Discuss Plans

IMPORTANCE OF MARKET RESEARCH

AN important meeting of the British Export Trade Research Organization took place on October 24 at Caxton Hall, London, when an attendance of 300 heard a report on progress and put forward their own views and questions about B.E.T.R.O. Mr. Arthur Ethell, Director of Administration, said that the organisation had been busy with administrative problems and with planning operational policy.

An intelligence service could be offered now, and in the beginning of 1946 specific research on instructions from members would be able to be carried out. Those instructions should be sent now, so that it would be possible to see what sort of tasks were to be faced.

Mr. Ethell emphasised the chief purposes of the meeting: first, to ask members to promote the value of B.E.T.R.O. among their friends in industry; and, second, to tell the management what sort of service they required and what problems allied to market research needed ready solution. He urged them to make active use of market research. "Without it," he said, "no export business could correctly assess the strength and potentiality of its market nor the innate preferences of its consuming public."

During the discussion which followed Mr. Ethell's address the view was expressed that much of B.E.T.R.O.'s work could be better carried out by the Export Groups, which were specialists in their particular field. But Mr. Ethell explained that when B.E.T.R.O. was first mooted an investigation showed that neither export groups nor trade associations could carry out the scientific work of market research, which demanded a special staff of experts. Many export groups had already invited B.E.T.R.O. to help them.

Lighting in Food Factories

The installation at Scribbans, Ltd., of Smethwick, affords a good example of the fluorescent lighting in a food factory.

The picture at the bottom of the page shows a counter with conveyor belt lighted by means of Mazda 80-watt Fluorescent Lamps in Mazdalux Trough Reflectors suspended at a height of 3 ft. above the conveyors.

The lighting units are spaced 10 ft. apart, and provide an illumination having the average intensity of 12-foot candles, as against the 3-foot candles given by the previous lighting installation of 60-watt Tungsten Filament Lamps.

The importance of high intensity, well diffused, and comfortable lighting in a food factory is obvious. Fluorescent lighting has the further quality of relatively cool operation. For a given amount of light a fluorescent installation produces only about a third as much heat as a tungsten lamp installation.

The fluorescent lighting installation with "daylight" lamps provides an atmosphere which encourages cleanliness and tidiness on the part of the operatives. In the case of the installation referred to above the high intensity and comparative shadowlessness of the lighting are helpful to the operatives, who have to work very rapidly and accurately packing materials brought to them on the conveyor belt.

Design in British Industry, 1946

The President of the Board of Trade states that the Council of Industrial Design will hold in the summer of next year a national exhibition of design in all the main ranges of consumer goods. The exhibition will be held in London. It will open not later than July 1, and it will be on a considerable scale.

"It will not be anything so vast or all-inclusive as a commercial exhibition or trade fair, and space will not be sold," said Sir Stafford Cripps. "It will represent the best and only the best that modern British industry can produce, largely the new post-war designs, but not excluding those good designs of the years immediately before the war which will be going into production again.

"This exhibition will be British industry's first great post-war gesture to the British people and to the world. I confidently believe that it will demonstrate the vigour, freshness, originality, and skill with which our manufacturers are setting about their task of serving the home consumer and capturing a great share of the export trade."

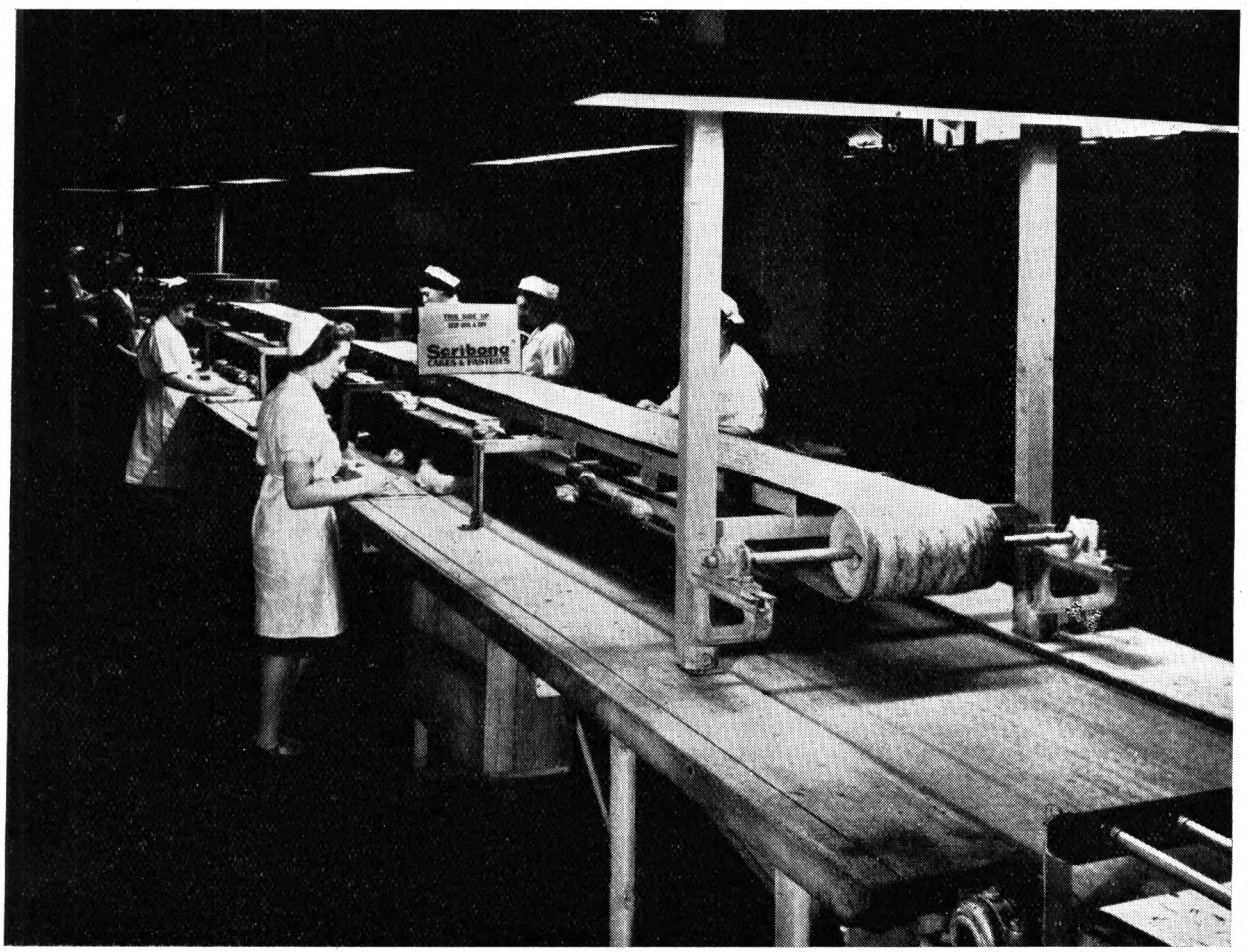

Fluorescent Lamps installed at Scribbans, Ltd., Smethwick.—*Courtesy of The British Thomson-Houston Co., Ltd.*

Company News

Allied Bakeries

Allied Bakeries has declared a third interim ordinary dividend of 5 per cent. (payable December 8), making 15 per cent. less tax. This compares with 10 per cent. annually for the five preceding years.

Hovis Deal

Hovis has acquired the Ordinary shares of Robinson Bros. (Rotherham) flour millers. Mr. Arthur Robinson remains the chairman and managing director of the company.

Hovis has an authorised capital of £800,000, of which £544,780 has been issued, consisting of £150,000 6 per cent. Preference and £394,780 Ordinary—all in £1 shares. A business marking recently in the Preference was at 31s. The Ordinary are quoted at 6⅛. Mr. A. H. Dence is the chairman.

Newfoundland Fisheries Enterprise

Formed with the object of fishery development in all its branches, North Atlantic Fisheries, Ltd., has been incorporated with a share capital of $1,500,000, it is announced from St. John's (N.F.). It takes over the controlling interest in Job Brothers, Ltd., and will offer shares to the public. The provisional directorate includes Mr. Hazen Russell, the promoter, Messrs. C. A. Pippy, Harold Macpherson, C. E. Hunt, Lewis Ayre, Gerald Doyle, and W. F. Hutchinson.

Spillers

It has been announced that Spillers have acquired the Ordinary shares of Paul Bros., flour millers, of Birkenhead, Coventry, and Cambridge.

The business of Paul Bros. will continue to be conducted as before, and Mr. F. O. Paul remains chairman and managing director of the company.

Since 1928 Spillers, which has an issued capital of £4,145,727, has acquired a number of undertakings in various parts of the country. The present acquisition will open up new areas.

Canning Industry and E.P.T.

Several companies in the canning industry have been hit rather heavily by way of E.P.T. and should be immediate beneficiaries from any alleviation of that tax. United Canners, whose 5s. shares are now changing hands around 12s., furnish an instance, as the £7,000 required last time to meet the increased dividend of 10 per cent., compared with £22,500 paid away by way of taxation. Earlier this year the company purchased the Ordinary share capital of J. and J. Beaulah, of Boston, Lincolnshire, for £105,000, satisfied by the issue of United Canners shares at 7s. 6d. each. The chairman at the meeting in May mentioned that the combined companies, by working only one day a week, could earn their combined E.P.T. standard, which was approximately 13¾ per cent. on the increased capital of £210,000.

Chambers Wharf and Cold Stores, Ltd.

At the eighteenth annual ordinary general meeting of Chambers Wharf and Cold Stores, Ltd., Mr. Charles Goldrei, chairman and managing director, stated that the net trading profit for the 52 weeks ended June 29, 1945 (after providing for payment to the Ministry of Food, Cold Storage Control, of the excess over the maximum allowed to be retained by the company), amounted to £76,397 17s. 10d., against £78,504 2s. 3d. for the previous period of 53 weeks; this is considered to be satisfactory in view of the revised additional restrictions on cold storage controlled profits applied by the Ministry of Food during the period under review. The net balance of profit for the period after providing for directors' fees, depreciation, War Damage Act, insurance premiums, and taxation amounted to £21,934 17s. 5d., against £22,832 14s. 4d. for the previous period. With the termination of hostilities the basis of calculating depreciation has been reviewed, and it has been decided that the sum of £10,266 12s. 1d. provided in the accounts under review is adequate under present conditions.

Horlicks, Ltd.

At the ordinary general meeting of Horlicks, Ltd., held recently, Lt.-Col. J. N. Horlick, O.B.E., M.C., presiding, said that the net trading balance, after providing for excess profits tax, was slightly in excess of the figure for the previous year, the available total being £242,398. The directors' report sets out the manner in which it is proposed to deal with this total—(*a*) Provision for taxation other than excess profits tax, £135,294; (*b*) Interim dividend of £66,666 (13⅓ per cent. actual), less income tax, paid April 4, 1945, £33,333; (*c*) Proposed final dividend of £83,334 (16⅔ per cent. actual), less income tax, for payment November 1, 1945, £41,667; (*d*) Balance to be carried forward, £32,104.

United Dairies, Ltd.

Proposing to pay a final dividend on the Ordinary stock of 7½ per cent., making 12½ per cent. for the year, Mr. Leonard Maggs, chairman and managing director of United Dairies, Ltd., in his address to the thirtieth ordinary general meeting, said that the total net assets of the group, including goodwill, are approximately £9,000,000. The reserves of the group, including undivided profits, total £3,285,565—that is, taking the figure of £1,406,415 appearing in the parent company's balance-sheet and adding the figure of £1,879,150 appearing in the consolidated statement of assets and liabilities of subsidiary companies.

The current assets of the parent company, including Government securities, £1,458,197, and tax reserve certificates, £1,560,025, are slightly higher than last year, but as explained then, when normal conditions return considerable expenditure will have to be incurred for re-equipment, and for the financing of stocks.

The net profits of the group, after provision for all taxation, are £433,714—that is, taking the balance of net profit shown on the parent company's profit and loss account (£262,915) and adding the balance on the consolidated statement of subsidiary companies' profit and loss accounts (£170,799). The comparable figure last year was £419,011.

Overseas Items

Better Bacon from Canada

Future shipments of Canadian bacon to Britain will be far superior in quality to the war-time bacon, which had to be specially cured to survive the Atlantic crossing. Improved shipping will enable Canada to send her best bacon, which will be in the hands of British housewives a month after packing.—*Reuter.*

Double-breasted Chicken

A prize of £1,250 has just been offered in the United States by the Great Atlantic and Pacific Tea Co. for a double-breasted chicken. An additional award of £750 will go to the agricultural college experts who help a farmer to win the prize.

The development of a broad-breasted turkey, having a good proportion of white meat, proved to be very good business to turkey breeders, and now there is a big demand for chickens. It is not expected that the prize will be awarded before 1948.

Sunflowers in Russia

In the U.S.S.R. the sunflower is an important oil-producing crop. Eleven years ago, when working at experimental station No. 8281 in the Don District, Leonid Zhdanov produced a sunflower that he named after the station. It was found to be resistant against broomrape, the sunflower's worst foe, and also against drought. Its yield was more than three or four times greater than the ordinary sunflower. A year after Zhdanov had completed his field trials it was sown on 5,000 acres. To-day it cover 2½ million acres.

When the Germans invaded the Don, Zhdanov managed to get his seed stock and laboratory equipment to safety and continued his work. Now he has produced a sunflower called "Steppe," rivalling No. 8281. In addition to having a higher oil content, it has an earlier ripening date, which is important, for the sunflower harvest in Russia precedes the planting of winter wheat and late-ripening varieties can hold up the sowing of this crop until the best sowing time has been passed.

"Can" for Frozen Foods

Frozen food packers have moved a step nearer the low production costs which heretofore have given canners a sizeable competitive edge. According to *Business Week*, the American Can Co. has developed a new container which, for the first time, permits automatic filling and sealing of frozen food packages. Its walls are paraffin-impregnated fibre board; ends are light tinplate, can be opened easily by peeling off after prying up a corner.

Coffee Extract Industry for Brazil

The possibility of establishing a coffee extract manufacturing industry in Brazil was discussed at a recent meeting of the Brazilian Rural Society, attended by the Secretary of the Brazilian Federal Economic Planning Board.

The question was introduced when the Secretary reported that, in reply to an offer of Brazilian coffee beans to France, the French Minister of Supply had stated that while France was greatly in need of this article, the fuel question was such that his Government was interested in the purchase of coffee extract.—*Reuter's Trade Service.*

Wood Steaks

One of the chief items on the menus of Swedish restaurants is "wood" steak, which, in the opinion of all good Swedes, is a whole lot better than no steak at all. Since the advent of "utility beef," steaks with all the characteristics of a nice, juicy piece of pine board may be no novelty to most Americans or Canadians. But in Sweden a "wood" steak is just what it means—it is actually made from wood yeast developed through a process of hydrolysis.

Dehydrated Whale Meat

At present whale meat is being dehydrated in Durban, and it is stated that Antarctic whales could be sent to Europe in that form.

Commercial Conditions Overseas

As announced in the October issue of FOOD MANUFACTURE, the Department of Overseas Trade are preparing a series of reviews of commercial conditions covering twenty-eight countries. Two new issues in the series have been published for Canada and Turkey, and these are obtainable, together with those previously published, from H.M. Stationery Office, York House, Kingsway, London, W.C.2, and its provincial branches.

School Inaugurates New Crop

A handful of soya beans given to the headmaster of Oda Government School in the Gold Coast has resulted in the introduction of a successful new crop to the district. Boys at the school planted the beans and the yield was replanted. They also intend to get the whole farming community interested in the bean, and local farmers are turning up at the school to find out more about the new crop.

Dehydration in S. Rhodesia

Southern Rhodesia's dehydration factories at Salisbury, Umtali, and West Nicholson are now producing dehydrated products of a very high standard. The Salisbury Government factory, which started production in May last, is now producing at full capacity, and is a fine example of local effort in overcoming war-time shortages. During the months before production started those responsible for the erection of the plant had to overcome many difficulties due to non-availability and, in some case, non-arrival of essential equipment.

Lightning Wrapping Machine

A new high-speed gum-wrapping machine, turning out a thousand sticks a minute, or nearly double the speed of the fastest previous gum wrapper, was recently developed by the Package Machinery Co. of America. After enveloping each stick in waxed paper, the machine puts a label around, then stacks the sticks in fives, and wraps them in a trade-marked package.

News from the Ministries

Allocation of Cooking Fat

No lard will be allocated to trade users for manufacturing purposes from November 11, 1945.

Compound cooking fat will be available against traders' lard datum.

Aluminium Foil

Attention is drawn to a decision of the Ministry of Supply and Aircraft Production (Light Metals Control) to the effect that aluminium foil is now in free supply and may be purchased without restriction.

Salad Cream and Mayonnaise

An Order prescribing a standard of composition for salad cream and mayonnaise has been made. This Order, which is to be read with the Food Standards (General Provisions) Order, 1944 (as amended), prohibits the sale of any product under such a description as to lead the intending purchaser to believe that he is purchasing salad cream or mayonnaise unless it contains not less than 25 per cent. by weight of edible vegetable oil and not less than 1·35 per cent. by weight of egg-yolk solids.

The Order makes it clear that the standard applies to any other salad dressings besides those sold as salad cream or mayonnaise unless there is attached to the wrapper or container a label bearing the words "This product is not a salad cream or mayonnaise and does not comply with the statutory standard prescribed for those products." This statement is not required, however, on the sale of salad dressing by a caterer as part of a meal.

The Labelling of Food (No. 2) Order has been amended to make it clear that for any salad sauce or other salad dressing which does not comply with the standard for salad cream and mayonnaise the ingredients must be specified on the label.

The Order came into force for sales by manufacturers on November 1, 1945; it will be in force for sales by wholesale on February 1, 1946, and for retail sales on May 1, 1946.

Appointment

Mr. P. D. H. Dunn, O.B.E., formerly an Inspector of Customs, and latterly head of the Fish Division in the Ministry of Food, who has been serving as one of the Commissioners in Newfoundland, has been appointed as a Principal Assistant Secretary in the Fisheries Department of the Ministry of Agriculture and Fisheries as from October 1, 1945.

Resignation

Mr. Eric D. Mackintosh, director of Cocoa, Chocolate, and Sugar Confectionery Division, found it necessary on personal grounds to relinquish his appointment on October 31, 1945. As from November 1, the Division came under the joint directorship of Mr. A. H. L. Johnson and Mr. S. P. Dobbs.

Captain R. E. Sawyer

The Minister of Food regrets to announce the death of Captain R. E. Sawyer, Divisional Food Officer for the North of Scotland Division. Captain Sawyer joined the Food (Defence Plans) Department in September, 1938, and continued to give valuable service as Divisional Food Officer throughout the whole of the war.

Alteration in Millers' Grists

Grists for bread-making in the London, Liverpool, Hull, and Bristol port areas were altered on October 15 to:

Manitoba wheat 70 per cent. maximum.

Home-grown wheat 25 per cent. minimum.

Plate wheat 5 per cent. (if not available, Manitoba and home-grown wheat were increased by 2½ per cent.).

A further alteration was made on October 17 to:

Manitoba wheat 80 per cent. maximum.

Home-grown wheat 20 per cent. minimum.

If Plate wheat is available it is to be used at the rate of 5 per cent., decreases of 2½ per cent. being made in Manitoba and home-grown wheat.

Use of Imported Flour

With reference to the recent announcement of the Amendment to the Flour Order, 1945, the Minister of Food announces that the imported flour may be used without restriction in the production of bread, flour confectionery, and biscuits, except that the maximum percentage imposed by the Bread and Flour Orders in the production of national bread still applies.

Amendment to the Flour Order

By an amendment to the Flour Order, 1945, which came into force on November 4, the Minister of Food has removed certain restrictions on the sale and use of imported flour and semolina. Directions have been issued to flour millers, flour importers, and flour factors permitting them to sell and deliver imported flour to buyers other than retail buyers, provided that in England and Wales a quantity of national flour at least nine times as great as the quantity of imported flour is sold or delivered at the same time. In Scotland at least three times as much national flour must be sold or delivered at the same time as the imported flour.

It is now permissible to use semolina in the production of bread, flour confectionery, and biscuits. Bakers will therefore be able to resume the use of semolina for dusting purposes. A licence is, however, still necessary for its use in manufactured meat products.

Persons other than flour millers are reminded that the mixing of imported flour into national flour for sale as flour is prohibited as constituting the production of a speciality flour, for which process the Minister's licence is necessary.

The export price of certain flours has been increased, and in certain areas the deductions allowable when flour is collected from mill or store by the buyer have been increased.

Copies of the Order (S.R. & O. 1945, No. 1347) can be obtained from H.M. Stationery Office at the usual addresses or through any bookseller.

Non-Standard Salad Dressing

An Order amending the Pickles and Sauces Order has been made to provide that non-standard salad dressings are subject to the same restrictions in respect of transportation as salad cream and mayonnaise and to provide maximum prices for any salad sauce or dressing other than salad cream or mayonnaise. The prices prescribed for salad cream and mayonnaise remain unaltered.

The Order came into force on November 1, 1945, in respect of transportation provisions and first-hand sales; in respect of sales by wholesale the date will be February 1, 1946, and sales by retail, May 1, 1946.

Pre-packing of Macaroni, etc.

A limited quantity of packing materials, at present confined to paper and board, will be made available for the pre-packing of macaroni and similar products, and consideration will be given to applications for licences under the Macaroni and Similar Products (Control and Maximum Prices) Order, 1942, as amended, authorising such pre-packing as from January 1, 1946.

Applications for licences from licensed manufacturers and from those persons who were pre-packing macaroni and similar products prior to September 16, 1942, should be addressed to the Cereal Products Division, Bryn Euryn, Colwyn Bay. Such application must be accompanied by a statement giving:

(*a*) In the case of licensed manufacturers the type of products, and estimated quantities per annum to be pre-packed in the following sizes:
  (i) ½-lb. pack
  (ii) 1-lb. pack.

(*b*) In the case of other pre-packers, details of the total quantity pre-packed during the year ended September 16, 1942, in
  (i) ½-lb. pack
  (ii) 1-lb. pack.

The Ministry does not undertake to grant assistance to pre-packers in obtaining supplies of macaroni and similar products.

It will be noted that as in the case of other pre-packed food products, the Labelling of Food (No. 2) Order will apply.

Change of Address

The new address of the Food Standards and Labelling Division, formerly of Colwyn Bay, is now 28, Lancaster Gate, London, W.2. Telephone Paddington 1811.

British Mission to America

In order to study and advise upon developments in the mechanisation of sugar-beet cultivation and harvesting, the Ministry of Agriculture arranged, in agreement with the Ministry of Food, to send a small mission to North America during the sugar-beet harvest season.

The mission will visit the principal growing areas during harvest and will study practical operations in the field and in the factories in addition to the research and development work being undertaken by university centres, sugar factories, and agricultural machinery manufacturers.

Sugar-Dried Egg

An Order has been made, operative from November 11, 1945, amending the Egg Products (Control and Maximum Prices) Order, 1943, by bringing "sugar-dried egg" within the definition of "egg products" and prescribing maximum prices applicable to sales of "sugar-dried egg" for baking and food manufacturing purposes.

The maximum price of "sugar-dried egg" on a sale to a baker or manufacturer is 3s. per lb. There are no changes in the margins at present permitted to the various classes of wholesalers licensed to sell egg products for manufacturing purposes.

Regional Boards for Industry

The Regional Production Boards have now been reconstituted by the President of the Board of Trade as Regional Boards for Industry. As announced on October 9, the Boards will in future exercise their activity over the whole field of productive industry instead of, as in the past, being chiefly concerned with the production of munitions.

The Boards each consist of an impartial chairman, together with three representatives of employers and trade unions, and the senior regional representatives of the Board of Trade, Admiralty, Ministries of Labour and National Service, Supply and Aircraft Production, Food, Fuel and Power, Town and Country Planning, War Transport, Works, and, in Scotland, the Scottish Office. Representatives of other departments will attend meetings when necessary.

Under the terms of reference the Boards will advise Ministers on industrial conditions in the regions, and upon steps which may be necessary to bring regional resources in productive capacity or labour into fuller use. Other duties will include those of keeping local industry advised of Government policy in relation to industry, and they will keep headquarters informed of the views of local industry.

Export Licensing

A simplified form of application for export licence will be brought into use as soon as supplies can be printed, and this revised form will call for considerably less information than that necessary during the war years.

Pending the introduction of the new form, exporters completing the present application form need no longer answer questions 6, 7, 8, 9, 10, 12, 13, 14, 15. Further, on page 3 the country of destination only need be given instead of the name and address of the consignee as at present. Thus, among other things, the names and addresses of the consignee or ultimate purchaser abroad, the forwarding agent at the port of discharge, and the agent through whom the order was secured need no longer be stated.

Exporters are reminded, however, that it is an offence to consign goods to a person included in the current Trading with the Enemy (Specified Persons) Orders, or to any territory* to which regulation 7 of the Defence (Trading with the Enemy) Regulations applies, and any goods sent forward for exportation and so consigned will be stopped by the officers of Customs and Excise.

* These territories at present include Germany, Japan, Roumania, Hungary, Bulgaria, and Siam.

Information and Advice

Mixed Spice

B.512. *Required a recipe for mixed spice.* (Eire.)

Mixed spice, in addition to spices, usually contains a proportion of rice flour and sometimes sugar. The spices employed are cinnamon, cassia, caraway, ginger, coriander, cloves, mace, and nutmeg in varying proportions, with cinnamon predominating.

The following are two typical mixtures:

	(1) *Per Cent.*	(2) *Per Cent.*
Rice flour	25	—
Cinnamon	28	32
Carraway	25	—
Coriander	3	32
Ground ginger ...	3	16
Mace	11	—
Nutmeg	5	16
Pepper	—	4
	100	100

Information Supplied

B.345. *Name and address of manufacturers of the herring-boning machine illustrated in* FOOD MANUFACTURE, *October,* 1943, *and also of machines for filling fish paste into tin and glass containers.* (Canada.)

B.346. *Information regarding the use of flavouring or essences in the manufacture of jam.* (S. Wales.)

B.347. *Particulars of recipes, methods of manufacture, and machinery for sauces, mayonnaise, etc.* (Middlesex.)

B.348. *Recipes for fat extenders suitable for use in the bakery trade.* (London.)

B.349. *Details of the latest method of processing dates for packeting.* (Liverpool.)

B.350. *Information regarding the sources of groundnut lecithin, preferably in Great Britain.* (France.)

B.352. *Recipes and suggestions for the manufacture of small quantities of high-grade ice cream, together with the names and addresses of manufacturers of good quality ice cream powder and formulae for the same.* (Middlesex.)

B.353 and B.354. *Manufacturers of the plant used in "A New Canning System" described in* FOOD MANUFACTURE, *May,* 1945, (Eire and London.)

B.374. *Names and addresses of manufacturers of paper caps for preserve jars.* (Cumberland.)

B.375. *Details of manufacturers of machinery for bottling sauces and also for packing sweet corn.* (London.)

B.376. *Information regarding the equipment required for a milk bar.* (Cheshire.)

B.377. *Full details of plant used in connexion with the manufacture of powdered milk.* (London.)

B.388. *Formulae for the manufacture of a synthetic cream.* (Cheshire.)

B.389. *Names and addresses of manufacturers or United Kingdom suppliers of the special envelope type lead-foil bags described in* FOOD MANUFACTURE, *August,* 1945. (Scotland.)

B.390. *Names and addresses of suppliers of a dehydrated extract prepared from the more common vegetables by boiling them in a dilute brine and evaporating the resulting liquor.* (Lancs.)

B.391. *Information regarding the manufacture of caramel colouring.* (S. Africa.)

B.392. *Names and addresses of firms supplying testing apparatus or instruments for foodstuffs.* (Portugal.)

B.393. *Particulars of firms specialising in the construction of* (a) *spraying machines for making milk powder, soap powder, etc.,* (b) *butter and cheese-packing machinery, and* (c) *germ-proof filters for fruit liquids.* (Holland.)

B.404. *Recipes for bottling meat pastes, chicken, ham, and tongue style.* (Scotland.)

B.405. *Information regarding the manufacture of pickles, sauces, etc.* (Canada.)

B.406. *Names and addresses of British manufacturers of sausage casings for export to Sweden.* (London.)

B.407. *Names and addresses of firms manufacturing small boxes for saccharin tablets.* (London.)

B.408. *Details of manufacturers of airtight metal closures for jam-packing in glass.* (Cambs.)

B.409. *Formulae for the manufacture of icing sugar, baking powder, and custard powder of pre-war standards, and also information regarding a suitable mill for grinding sugar.* (New Zealand.)

B.410. *Names and addresses of firms in South Africa and South Australia who make bakers' sundries.* (Staffs.)

B.411. *Names and addresses of manufacturers of meat hashers.* (Eire.)

B.412. *Details of firms supplying machinery for the production of breakfast cereals.* (Eire.)

B.422. *Suppliers of equipment suitable for the confectionery and chocolate trade together with appropriate literature on the subject.* (Glos.)

B.423. *Name and address of the manufacturers of the N.P.L. Moisture Meter.* (Hants.)

B.424. *Manufacturers of the plant used in "A New Canning System" described in* FOOD MANUFACTURE, *May,* 1945. (Australia.)

B.426. *Information relevant to the production of potato crisps and suppliers of equipment for their manufacture.* (Ireland.)

Information Required

B.538. *Makers of equipment for separating gluten from wheat starch.* (Canada.)

Recent Patents

These particulars of new patents of interest to readers have been selected from the "Official Journal of Patents," and are published by permission of the Controller of H.M. Stationery Office. The journal can be obtained from the Patent Office, 25, Southampton Buildings, London, W.C. 2, price 1s. weekly (annual subscription £2 10s.).

Abstracts of Recent Specifications

Improved Egg Product

This invention relates to the treatment of eggs and has for one of its objects to improve their beating properties. Other objects are the inexpensive production of egg material having improved beating properties, that can be readily preserved, and that can be stored in a relatively small space.

It is known that if egg white is subjected to the natural process known variously as "ripening," "sickening," or "fermenting," it becomes acidified to a *p*H of less than 7 but higher than the isoelectric point (*p*H about 5·4). During this process, which takes about seven days for completion, certain solids (sometimes referred to as "globulins") are separated out, and it is known that the beating properties of the residual fluid at the completion of the process are greater than those of fresh egg white. Prior to the completion of the process, however, unpleasant odours develop which taint the residual fluid and impose severe limitations on its subsequent use.

As alternatives to ripening egg material, for the purpose of improving its beating and keeping qualities, it has heretofore been proposed to treat unripened egg material by processes which include adding acids or acid-reacting substances under conditions that prevent fermentation.

According to this invention separated egg whites are ripened in the presence of an acid-reacting phosphate or a dilute mineral acid until the *p*H is from 6·3 to 6·5, and then evaporated to a syrupy consistency. The product may then be mixed with egg yolk in any desired proportion, having regard to the use to which it is to be put, and, if it is to be stored or transported, it can be kept sweet for considerable periods by depressing its temperature to just above freezing point, or by freezing it. Similarly, the product may be preserved in the same way without admixture with egg yolk.

By adding the acid-reacting phosphate or dilute mineral acid the aforesaid natural process is accelerated to a degree that enables the enhanced beating properties to be obtained prior to the development of the unpleasant odours. In the case of fresh egg whites, the process according to the invention secures ripening in about four days, but when, however, the egg white is not fresh and its *p*H is lowered in consequence, the process may automatically be further abridged.

The acid-reacting phosphate or dilute mineral acid, which, as the egg white is heavily buffered by its protein content, has very little effect on the *p*H value, may be added after the natural process has commenced, but the maximum shortening of the period of the said process will be obtained when the addition is made at the commencement.

Preferably, a small proportion of an edible colloid, or glycerine, or both, is added prior to the evaporation step.

The evaporation is carried out at a temperature just below the coagulation temperature of 130° F., and continued until the product of syrupy consistency contains approximately from 30 to 50 per cent. of water, by weight, according to the use for which the product is required.

570,268. Archibald John Bellamy.

Improvements in, or relating to, the Preparation of Peanut Protein

According to this invention the method for the production of peanut globulin comprises extracting the globulin from comminuted peanut material containing no appreciable amount of fragments of testa by treating the said peanut material with a dilute alkaline solution of such concentration that a *p*H of at least 11·0 is maintained during the said extraction, separating the alkaline extract from undissolved matter, and thereafter precipitating the globulins from the alkaline extract, as by acidifying the said extract to the isoelectric region of the globulins.

In order to minimise the chemical attack on the globulins it is preferred that they should not be exposed in the aforesaid operations in the dissolved condition to an alkalinity higher than 11·5 for any substantial period of time.

In putting the invention into effect, sodium hydroxide may conveniently be employed as the alkali; potassium hydroxide may also be used, but mild alkalis are ineffective. More generally it may be stated that the alkali must be capable of yielding an aqueous solution of *p*H at least approximately 12·7 in the absence of the peanut material, for the globulins depress the *p*H of the extracting liquid very noticeably. The weight of the extracting alkaline solution should be several times, as for example at least seven times, that of the peanut material to be extracted and preferably the total quantity of alkali required should be added quickly and in one stage. Preferably also the oil as well as the material of the testa is substantially removed before the alkaline extraction is commenced. Preferably all the operations incident to the isolation of the globulins from the peanut are conducted at temperatures not exceeding 40° C.

The removal of the testa may be accomplished by mechanical action and winnowing or the like, and its detachment from the peanut may be effected before, or during, or partly before and partly during the comminution of the nuts. The testa is loosened or detached by the machine used to commence the comminution of the peanuts, and provided its action is not so severe as to rupture the cells sufficiently to cause excessive exudation of oil, the fragments of the testa can easily be blown away. Comminution of the peanuts in stages with intermediate blowing is therefore an effective way of removing the testa material.

570,908. Sarah Neilson McGeoch and Imperial Chemical Industries, Ltd.

Specifications Published

Printed copies of the full Published Specifications may be obtained from the Patent Office, 25, Southampton Buildings, London, W.C. 2, at the uniform price of 1s. each.

571,277. PALMER, A. R., and BAKER PERKINS, LTD.: Conveying of dough and like plastic material.

571,295. FRIGIDAIRE, LTD., and WILLIAMS, C. E.: Refrigerators.

571,524. CARVER, F. S.: Process of making chocolate and the product thereof.

571,563. HARBER, L. S., and BAKER PERKINS, LTD.: Delivering dough pieces to baking tins for making bread loaves.

571,757. NUTBROWN, LTD., T. M., and NUTBROWN, T. M.: Can openers.

571,903. SAXER, T.: Apparatus for toasting bread and other foodstuffs.

571,974. DOYLE, R. G.: Process for peeling potatoes and fruits.

572,142. FEACHEM, C. G. P., and IMPERIAL CHEMICAL INDUSTRIES, LTD.: Prevention of deterioration of grain.

572,181. LATINI, L.: Decorating apparatus for coated confections and the like.

572,185. PATON, CALVERT AND CO., LTD., and PATON, W.: Cake tins and like containers.

Trade Marks

The list of trade marks of interest to readers has been selected from the "Official Trade Marks Journal" and is published by permission of the Controller of H.M. Stationery Office. The journal can be obtained from the Patent Office, 25, Southampton Buildings, London, W.C. 2, price 1s. weekly (annual subscription £2 10s.).

BANDBOX.—630,211. Confectionery (not medicated). **Ashe Laboratories, Ltd.,** 120/2, Victoria Street, Westminster, London, S.W.1; Manufacturers.

HALL'S.—630,518. Sweetmeats (not medicated) and chocolates. **Hall Brothers (Whitefield), Ltd.,** Confectionery Works, Stanley Street, Whitefield, near Manchester; Manufacturing Confectioners.

MEADOW PRIDE.—630,823. Bacon, canned meat roll, canned hams, canned brisket, canned tongues, canned pork, luncheon meat, and canned galantines. **H. C. Hay and Co., Ltd.,** 16, Great Dover Street, London, S.E. 1; Produce Merchants.

GOLDEN WINGS.—634,316. Alimentary paste preparations for food; cereals prepared for food for human consumption; rice and flour. **Chelsea Food Products, Ltd.,** 15, Lots Road, London, S.W. 10; Manufacturers.

CONCORD. — 635,318. Flour, and cereal products prepared for food for human consumption. **Joseph Rank, Ltd.,** 107, Leadenhall Street, London, E.C. 3; Millers.

CASOL.—634,324. Bread improvers. **Cason Products, Ltd.,** Cason House, Bath Road, Hounslow, Middlesex; Merchants.

APEX.—634,332. Groats, rice (except rice flour), cereal puddings, sausage meal, sausage rusks, condiments, gravy salt, seasonings, spices, stuffings consisting principally of cereal products. **Stokes and Dalton, Ltd.,** Victoria Spice Mills, York Road, Leeds; Manufacturers and Merchants.

PERLO. — 634,335. Macaroni, spaghetti, vermicelli, and noodles. **British Fermentation Products, Ltd.,** Chieftain Works, Putney Bridge Road, London, S.W. 15; Manufacturers.

ITBAR.—634,365. Confectionery (not medicated) in the form of bars. **Stanley Walter Bearman,** trading as **Medi-Swete Co.,** 154, Greenford Road, Harrow, Middlesex; Pharmaceutical Chemist.

SEMOFOOD.—634,431. Cereals prepared for food for human consumption. **Semofood, Ltd.,** 3, Empire Way, Wembley Park, Middlesex; Food Manufacturers.

HONISERVES.—634,821. Honey preserves. **Ernest Marshall,** trading as **Copper Kettle Preserves,** Chester Walk, Cheltenham Spa, Gloucestershire; Manufacturer.

HOL-I-TRE.—634,480. Sugar confectionery (not medicated). **John Arthur Holland, Senior, Nellie Holland, John Arthur Holland, Junior, Kathleen Holland** and **Marjorie Holland,** trading as **Arthur Holland,** 74, Virginia Street, Southport, Lancashire; Manufacturers and Merchants.

SUNDAC.—634,543. Spices, seasonings, flavourings (other than essential oils), cooking essences (other than essential oils), meal (being food for human use), sauces and sauce powders, sausage fillings, sausage binding materials. **Herbert Munday,** trading as **W. H. Munday and Sons,** 127, Water Street, Manchester, 3; Merchant.

MAID MARIAN. — 634,549. Flour, lemon curd, and honey. **Danish Bacon Co., Ltd.,** 9/13, Cowcross Street, West Smithfield, London, E.C.1; Merchants.

FUNFAIR.—634,693. Confectionery (not medicated). **John Mackintosh and Sons, Ltd.,** Albion Mills, Waterside, Halifax, Yorkshire; Manufacturers.

BARSH.—634,714. Sauces. **Amarant, Ltd.,** Northgate House, 20-24, Moorgate, London, E.C. 2; Manufacturers and Merchants.

MULWEST.—634,814. Coffee, tea, cocoa, biscuits (other than biscuits for animals), confectionery and sweetmeats (none being medicated), vinegar and sauces. **Mullins and Westley, Ltd.,** 43, New Cavendish Street, London, W. 1; Manufacturers and Merchants.

BIBSOL.—634,873. Edible oils and edible fats. **J. Bibby and Sons, Ltd.,** 21, King Edward Street, Liverpool; Manufacturers.

FRANSOY. — 634,879. Fillings prepared from soya flour, for use in bakers' confectionery. **British Fondants, Ltd.,** Avern Works, Avern Road, East Molesey, Surrey; Manufacturers and Merchants.

ARKASOY.—634,916. Soya flour; products principally of soya flour for use in the manufacture of bread, biscuits, cakes, pastry, and of confectionery. **The British Arkady Co., Ltd.,** Skerton Road, Old Trafford, Manchester, 16; Manufacturers.

CARAMBA.—634,946. Confectionery (not medicated). **Clyde Confections, Ltd.,** Block 16, Watt Road, North Hillington, Glasgow, S.W. 2; Manufacturers.

VIVLA. — 634,954. Flavouring essences (other than essential oils) for foodstuffs and for confectionery. **J. N. Nichols and Co., Ltd.,** Britannic Works, Ayres Road, Manchester, 16; Manufacturing Chemists.

Correction.—In the October issue the name "Uate" was spelt wrongly. The paragraph should read:

UATE. — 632,932. Tea, coffee, and cocoa. **Cross, Sons and Absolom, Ltd.,** Ibex House, Minories, London, E.C.3; Merchants.

New Companies

Blending Machine Company, Limited. (397990.) Bond Street, Hockley, Birmingham 19. To carry on bus. of manufacturers of and dealers in machines for treating tea, coffee, cocoa, cereals, etc. Nom. cap.: £3,000 in £1 shares. Dirs.: W. E. Box, 795, Chester Road, Erdington, Birmingham 23; J. T. Claridge, 22a, Sedgemere Road, Yardley, Birmingham 26.

James Hodson (Millers), Limited. (398002.) The Mill, Robertsbridge, Sussex. Nom. cap.: £10,000 in £1 shares. Dirs.: T. Dadswell, The Mill, Robertsbridge; T. R. Dadswell, Montcalm, Brightling Road, Robertsbridge; S. G. Oddy, Mill House, Robertsbridge.

Abbott Bros. (Western), Limited. (398091.) 4-6, Cattdown Road, Plymouth. To carry on bus. of refrigeration and cold storage engineers, etc. Nom. cap.: £5,000 in £1 shares. Dirs.: F. A. S. Abbott, 5, Burlington Crescent, Headington, Oxford; S. J. B. Abbott, 205, London Road, Twickenham.

Liebig's (Tanganyika), Limited. (398138.) Thames House, Queen Street, E.C. 4. To carry on in the Tanganyika Territory and elsewhere the bus. of food specialists, preserved meat manufacturers, etc. Nom. cap.: £100 in £1 shares. Dirs.: K. M. Carlisle, 10, Cadogan Square, S.W. 1; Sir E. Bell, Bt., Fosbury Manor, Marlborough; Lt.-Col. F. M. G. Glyn, Albury Hall, Much Hadham; W. E. Martin, Silverdale, Farnham Lane, Haslemere; G. Brinton, Bulawayo.

Tidey's Mill, Limited. (398146.) Amabel, Broadbridge Heath, Horsham. To take over bus. of a miller carried on at Partridge Green, Sussex, by Herbert J. Tidey. Nom. cap.: £10,000 in £1 shares. Dirs.: J. E. Whittome, Turnhams Hill, Henfield; R. M. Tilling, The Copse, Bury Gate, near Pulborough; Nora B. Maddison, H. W. Hobden, C. H. Heath, and A. N. Spong.

Canning Developments, Limited. (398175.) To carry on bus. of manufacturers and packers of, dealers in, and agents for food products, containers, and general merchandise, etc. Dirs.: To be appointed by subs. Nom. cap.: £100 in £1 shares. Subs.: P. O. Ansell, 54, High View Gardens, Potters Bar; P. W. Sanderson, 59, Shirley Road, Croydon.

International Herbs, Limited. (397745.) Nom. cap.: £1,000 in £1 shares. Dirs.: To be appointed by subs. Subs.: Mrs. J. Bowen, 16, Alma Square, N.W. 8; Ellen Bennett, 7, Hartland Drive, Ruislip (clk.).

Taken from the Daily Register, compiled by Jordan and Sons, Limited, Company Registration Agents, 116, Chancery Lane, London, W.C. 2.